BS 100

BS 100

REYNAERS aluminium

Cat. nr. 56
Art. nr. PP_AD.089.C56C.00 (v01)
Edition 09/2020

Inhoud
Sommaire
Content
Inhalt

Inhoud

Algemene informatie

Algemene informatie systeme

Profielen

Werktekeningen

Montagetekeningen

Toebehoren

INHOUDSTAFEL
TABLE DES MATIERES
TABLE OF CONTENTS
INHALTSANGABE

INHOUDSTAFEL
TABLE DES MATIERES
TABLE OF CONTENTS
INHALTSANGABE

Sommaire

Généralités

Généralités séries

Profilés

Coupes et débits

Fabrication et montage

Accessoires

INHOUDSTAFEL
TABLE DES MATIERES
TABLE OF CONTENTS
INHALTSANGABE

INHOUDSTAFEL
TABLE DES MATIERES
TABLE OF CONTENTS
INHALTSANGABE

Content

General Information

General Information System

Profiles

Work drawings

Assembly drawings

Accessories

INHOUDSTAFEL
TABLE DES MATIERES
TABLE OF CONTENTS
INHALTSANGABE

INHOUDSTAFEL
TABLE DES MATIERES
TABLE OF CONTENTS
INHALTSANGABE

Inhalt

Allgemeine Information

Allgemeine Information Syste

Profile

Werkzeichnungen

Montagezeichnungen

Zubehör

INHOUDSTAFEL
TABLE DES MATIERES
TABLE OF CONTENTS
INHALTSANGABE

INHOUDSTAFEL
TABLE DES MATIERES
TABLE OF CONTENTS
INHALTSANGABE

INHOUDSTAFEL
TABLE DES MATIERES
TABLE OF CONTENTS
INHALTSANGABE

A

REYNAERS aluminium

Algemene informatie
Généralités
General Information
Allgemeine Information

SYMBOLENLIJST
LISTE DES SYMBOLES
LIST OF SYMBOLS
ZEICHENERKLAERUNG

Profiel Profilé Profile Profil	Perfil Profil Profili	
Anodisatie- of lakoppervlakte Surface anodisée ou laquée Anodizing or coating surface Eloxierte oder lackierte Oberfläche	Superficie anodizada o lacada Powierzchnia anodowana lub malowana Superficie anodizzata o verniciata	
Polijstoppervlakte Surface à polir Polishing surface Polieroberfläche	Superficie pulida Powierzchnia polerowana Superficie lucidata	
Lengte Longueur Length Länge	Longitud Dlugosc Lunghezza	
Afmetingen Dimensions Dimensions Abmessungen	Dimensiones Wymiary Dimensioni	
Toepassing Application Application Anwendung	Applicación Zastosowanie Utilizzo	
Bevestigingsmiddelen Moyens de fixation Fixations Befestigungsmittel	Fijación Mocowanie Fissaggio	
Schroeven niet meegeleverd Fourniture sans vis Delivered without screws Lieferung ohne Schrauben		Entregado sin tornillos Dostarczane bez wkretow Consegnato senza viti
Montagevolgorde Ordre de montage The order of assembly Montagereihenfolge	Orden de montaje Kolejnosc montazu Ordine di montaggio	
Dichtingsmiddel Matière d'étanchéité Sealing agent Abdichtungsmittel	Agente sellante Masa uszczelniajaca Siliconatura	
Verlijmen Coller Glue Verkleben	Collado Klej Colla	
Vulcaniseerlijm Colle vulcanisante Vulcanizing glue Vulkanisierkleber	Vulcanizante Klej wulkanizacyjny Colla vulcanizzante	
Referentiemaat Dimension de référence Reference dimension Referenzmass	Dimension de referencia Punkt odniesienia wymiarowania Dimensioni di riferimento	
Merkteken Marquage Mark Merkzeichen	Indicación Znak Contrassegno	
Struktureel gelijmd glaswerk Vitrage extérieur collé Structural sealing glazing UV-beständiger Scheibenrandverbund		Sellado acristalado estructural Szyba klejona spoiwem konstrukcyjnym Siliconatura vetro strutturale
Primaire zichtzijde van een profiel Côté visible primaire d'un profilé Primary visible side of a profile Primäre sichtbare Seite eines Profils		Cara vista principal del perfil Glowna widoczna powierzchnia profilu Primo lato visibile di un profilo
Secundaire zichtzijde van een profiel Côté visible secondaire d'un profilé Secondary visible side of a profile Sekund. sichtbare Seite eines Profils		Cara vista secundaria del perfil Drugorzedna widoczna powierzchnia profilu Secondo lato visibile di un profilo

Verstek Onglet Mitre Gehrung		Inglete Połaczenie katowe Taglio
Aantal Nombre Number Anzahl		Número Ilosc Numero
Zie pagina Voir page See page Siehe Seite		Ver página Patrz strona Vedi pagina
Type toebehoren Type accessoires Type accessories Typ Zubehör		Tipos de accesorios Rodzaj okuc Tipo di accessorio
Glasmaten Dimensions vitres Glass sizes Glasmasse		Dimensiones de los vidrios Wymiary szyby Dimensioni del vetro
Toepassing Application Utilization Anwendung		Applicación Zastosowanie Riferimenti
Asymmetrisch profiel Profilé asymétrique Asymmetrical profile Asymmetrisches Profil		Perfil asimetrico Profil niesymetryczny Profilo assimmetrico
Pagina Page Page Seite		Página Strona Pagina
Laatste editie Dernière édition Last edition Letzte Edition		Edición Poprzednie wydanie Ultima edizione
Vorige blz Page précédente Previous page Vorige Seite		Página siguiente Poprzednia strona -
Verstevigingsprofiel Profil de renforcement Reinforcement profile Verstaerkungsprofil		Perfil refuerzo Profil wzmacniajacy

Bicolor

Kleur buitenschaal (e) eerst aangeven in geval van bicolor (.69)

En cas de bicolore (.69) il faut indiquer d'abord la couleur du profilé extérieur (e)

For bicolor profiles (.69) first of all one should indicate the colour of the outer profile (e)

Falls zweifarbig (.69) soll man erst die Farbe des Aussenprofils (e) angeben

Para perfil en bicolor (.69) debe indicarse primero el color del perfil externo (e)

Dla profili dwukolorowych (.69) w pierwszej kolejnosci powinnien być wskazany kolor zewnetrznej strony profilu (e)

Nei profili bicolore (.69) prima di tutto indicare il colore del profilo esterno (e)

D0062175

SYMBOLENLIJST
LISTE DES SYMBOLES
LIST OF SYMBOLS
ZEICHENERKLAERUNG

A

	Inbraakwerend Anti-vol Burglar proof Einbruchhemmend	Protección anti-robo Antywlamaniowe -
	Basisveiligheid Securité de base Basic safety Basissicherheit	Seguridad básica Antywlamaniowosc podstawowa -
2 ENV	Testen uitgevoerd volgens norm DIN V ENV 1627 Essais effectués par conformément la norme DIN V ENV 1627 Tests carried out according to standard DIN V ENV 1627 Einbruchhemmende Prüfungen gemäß Norm DIN V ENV 1627	Ensayos realizados según norma DIN V ENV 1627 Badania wykonane wedlug normy DIN V ENV 1627 - -
2 NEN	Testen uitgevoerd volgens norm NEN 5096 + ENV 1627 Essais effectués par conformément la norme NEN 5096 + ENV 1627 Tests carried out according to standard NEN 5096 + ENV 1627 Einbruchhemmende Prüfungen gemäß Norm NEN5096 + ENV1627	Ensayos realizados según norma NEN 5096 + ENV 1627 Badania wykonane norm NEN 5098 + ENV 1627 - -
	Testen uitgevoerd door instituut IBS (Oostenrijk) volgens norm Ö B 3800/3850 Essais effectués par IBS(Autriche) conformément la norme Ö B 3800/3850 Tests carried out by IBS (Austria) according to standard Ö B 3800/3850 Brandschutzprüfungen durchgeführt beim IBS (Österreich) gemäß Norm Ö B 3800/3850	Ensayos hechos por IBS (Austria) según la estandard Ö B 3800/3850 Badania wykonane przez IBS (Austria) wedlug norm Ö B 3800/3850 - -
	Testen uitgevoerd door instituut TNO (Nederland) volgens norm NEN 6069:1997 Essais effectués par TNO (Hollande) conformément la norme NEN 6069:1997 Tests carried out by TNO (The Netherlands) according to standard NEN 6069/1997 Brandschutzprüfungen durchgeführt beim TNO (Die Niederlände) gemäß Norm NEN 6069/1997	Ensayos realizados fuera por TNO(Holanda) según norma NEN 6069/1977 Badania wykonane przez TNO (Holandia) wedlug norm NEN 6069/1977 - -
	Brandwerend Anti-feu Fire-proof Feuerhemmend	Resistente al fuego Ognioodporne -
F	Toebehoren brandwerend Accessoires anti-feu Fire-proof accessories Feuerhemmender Zubehör	Accessorios resistente al fuego Akcesoria ognioodporne -
	Gelaagd glas Verre feuilleté Laminated glass Verbundglas	Vidrio Laminado Szyba laminiowana -
	Glas Verre Glass Glas	Vidrio Szyba -
	Handleiding Manuel Manual Gebrauchsanweisung	Manual Instrukcja -
! CS 59	Alleen voor CS 59 Seulement pour CS 59 Only for CS 59 Nur für CS 59	Solo para CS 59 Tylko do CS 59 -
! CS 68	Alleen voor CS 68 Seulement pour CS 68 Only for CS 68 Nur für CS 68	Solo para CS 68 Tylko do CS 68 -
! CS 77	Alleen voor CS 77 Seulement pour CS 77 Only for CS 77 Nur für CS 77	Solo para CS 77 Tylko do CS 77 -

	Pershoekverbinding Equerre à sertir Crimp corner cleat Presseckverbinder	Escuadra de ensamblar Naroznik zaciskany Squadrette a cianfrinare
	Hoekverbinding met schroefhoek (*) enkel voor klembaar beslag Equerre à blocage (*) seulement pour accessoires encastrables Corner cleat with screw (*) only for clamping accessories Eckverbinder mit Spannschraube (*) nur für klemmbaren Beschlag	Escuadra de atornillar (*) solo para accesorios apretables Naroznik skrecany (*) tylko dla akcesoriow zatrzaskiwanych Squadrette ad avvitare (*) solo per accessori a scatto
	T-verbinding met schroef Jonction-T avec vis T-bracket with screw T-Verbinder mit Schraube	Tope de union con tornillo Lacznik teowy skrecany Giunti con viti
e	T-verbinding met schroef voor buitendraaiend raam Jonction-T avec vis pour fenêtre ouvrant vers l'ext. T-bracket with screw outside opening window T-Verbinder mit Schraube aussen öffnendes Fenster	Tope Unión con tornillo apertura exterior Lacznik teowy skrecany do okien otwieranych na zewnatrz - -
	Vulhoek Equerre de remplissage Corner support Fülleckwinkel	Escuadra de relleno Wspornik narozny Supporto d'angolo
	Steunhoek Cale de feuillure Rebate support Glasanschlagwinkel	Escuadra de alineamiento Katowy naroznik Squadrette di allineamento
	Verstelbare schroefhoek Equerre à visser réglable Adjustable screw corner cleat Verstellbarer Schraubeckwinkel	Escuadra de atornillar regulable Katowy naroznik skrecany Squadrette ad avvitare regolabili
	Steunhoeken verstelbaar Cales de feuillure réglables Rebate supports adjustable Verstellbare Eckwinkel Glasanschlag	Escuadra de alineamiento regulable Katowy naroznik nastawny Squadretta di allineamento regolabile
	Hoekverbinding met nagel Equerre avec cheville Corner cleat with drive pin Eckverbinder mit Stift	Escuadra con clavia Lacznik narozny sworzniowy -
	T-verbinding met nagel Jonction-T avec cheville T-bracket with drive pin T-Verbinder mit Stift	Tope de union con clavia Lacznik teowy sworzniowy -
e	T-verbinding met nagel voor buitendraaiend raam Jonction-T avec cheville pour fenêtre ouvrant vers l'ext. T-bracket with drive pin outward opening window T-Verbinder mit Stift nach aussen öffnendes Fenster	Tope unión con clavia apertura exterior Lacznik teowy sworzniowy do okien otwieranych na zewnatrz - -
	Verstelbare T-verbinding Jonction-T réglable Adjustable T-bracket Verstellbarer T-Verbinder	Union T regulable Lacznik teowy nastawny Giunti a T regolabili
	Kruisverbindingen Jonctions transversales Cross connections Kreuzverbindungen	Uniones transversales Polaczenie krzyzowe -
	Kruisverbinding met schroef Jonction transversale avec vis Cross connection with screw Kreuzverbindung mit Schraube	Union transversal con tornillo Polaczenie krzyzowe skrecane -
	Bevestiging drager Fixation chevon Fixation rafter Befestigung Dachsparren	Fijacion mainel Mocowanie krokwi -

D0063002

SYMBOLENLIJST
LISTE DES SYMBOLES
LIST OF SYMBOLS
ZEICHENERKLAERUNG

	Eénpuntsluiting Fermeture à 1 point 1-Point lock Einfachverriegelung	Cerradura de 1 punto Zamek 1-punktowy Serratura a 1 punto di chiusura
1	Eénpuntsluiting met dagschieter Fermeture à 1 point à pêne 1-Point lock with latch Einfachverriegelung mit Falle	Cerradura 1 punto golpe Zamek 1-punktowy Serratura a 1 punto di chiusura con fermo
1 ●	Eénpuntsluiting met rol Fermeture à 1 points à rouleau 1-Point lock with roller Einfachverriegelung mit Rolle	Cerradura de 1 punto con rodillo Zamek 1-punktowy z barylka Serratura a 1 punto di chiusura con rullino
1	Haakslot Serrure à crochet Hook lock Hakenschloss	Cerradura gancho Zamek hakowy -
2	Tweepuntsluiting Fermeture à 2 points 2-Point lock 2-Fachverriegelung	Cerradura de 2 puntos Zamek 2-punktowy Serratura a 2 punti di chiusura
3	Driepuntsluiting Fermeture à 3 points 3-Point lock Dreifachverriegelung	Cerradura de 3 puntos Zamek 3-punktowy Serratura a 3 punti di chiusura
3 ●	Driepuntsluiting met rol Fermeture à 3 points à rouleau 3-Point lock with roller Dreifachverriegelung mit Rolle	Cerradura de 3 puntos con rodillo Zamek 3-punktowy z barylka Serratura a 3 punti di chiusura con rullino
4	Vierpuntsluiting Fermeture à 4 points 4-Point lock 4-Fachverriegelung	Cerradura de 4 puntos Zamek 4-punktowy Serratura a 4 punti di chiusura
5	Vijfpuntsluiting Fermeture à 5 points 5-Point lock Fünffachverriegelung	Cerradura de 5 puntos Zamek 5-punktowy Serratura a 5 punti di chiusura
5 ●	Vijfpuntsluiting met rol Fermeture à 5 points à rouleau 5-Point lock with roller Fünffachverriegelung mit Rolle	Cerradura de 5 puntos con rodillo Zamek 5-punktowy z barylka Serratura a 5 punti di chiusura con rullino
6	Zespuntsluiting Fermeture à 6 points 6-Point lock 6-Fachverriegelung	Cerradura de 6 puntos Zamek 6-punktowy Serratura a 6 punti di chiusura
7	Zevenpuntsluiting Fermeture à 7 points 7-Point lock Siebenfachverriegelung	Cerradura de 7 puntos Zamek 7-punktowy Serratura a 7 punti di chiusura
	Espagnoletslot Fermeture espagnolette Espagnolette Lock Treibriegelverschluss	Cierre ventana Zamek drzwiowy do blokady pionowej Serratura a spagnoletta
	Cilinders Cylindres Cylinders Zylinder	Bombines Cylindry Cilindri
	Cilinderplaten Ecussons Cylinder covers PZ-Rosette	Escudos bombin Oslona wkladki bebenkowej Copertura cilindri
	Slotpaden Gâches Receivers Schliessbleche	Gancho Gniazdo rygla zamka Riscontri
	Deursluiters Ferme-porte Door closer Türschliesser	Cierrapuertas Samozamykacz drzwiowy Chiusura porta

	Elektrische deuropener Gâche pour serrure électrique Electric door opener Elektrischer Türöffner	Portero automatico Elektrorygiel Apertura porta elettrica
	Deurgrendels en kantschuiven Verrous de condamnation portes Flush and door bolts Kantenriegel und Türtreibriegel	Pasadores puerta Rygle biernych skrzydel drzwiowych Catenacciolo chiusura centrale
	Geen elektrische spanning bij gesloten deur En cas de porte fermé pas des tension électrique No electric tension in case of closed door Keine elektrische Spannung bei geschlossener Tür	Sin tensión eléctrica en caso de que la puerta esté cerrada Brak elektrycznego napiecia w przypadku zamknietych drzwi - -
	Raampompen Crémones Window handles Handhebel	Cremona Klamka okienna Cremonese
	Deurkrukken Béquilles Door handles Türdrücker	Manubrios Klamka drzwiowa Maniglie
	Sluitingen dubbele deur Serrures pour porte double Locks for double door Türtreibriegel	Cerradura puerta doble Blokada drzwi dwuskrzydlowych Serratura porta a 2 ante
e	Raampomp naar buiten draaiend raam Crémone fenêtre ouvrant vers l'extérieur Handle outward opening window Handhebel nach aussen öffnendes Fenster	Cremona ventana apertura exterior Klamka okna otwieranego na zewnatrz - -
	Raamscharnieren Paumelles pour fenêtres Window hinges Fensterbänder	Bisagras ventana Zawias okienny Cerniere
	Deurscharnieren 2-delig Paumelles porte 2-partite Door hinges 2-part Türbänder 2-teilig	Pernio puerta 2 palas Zawias drzwiowy 2-czesciowy Cerniera 2 ali
	Deurscharnieren 3-delig Paumelles porte 3-partite Door hinges 3-part Türbänder 3-teilig	Pernio puerta 3 palas Zawias drzwiowy 3-czesciowy Cerniera 3 ali
	Afstandsbussen Pièces de distance Set of distance bushes Distanzbuchsen	Piezas distanciadoras Tuleje dystansowe Set distanzialli spazzolino
	Geen afstandsbussen nodig Pas de pièces de distance No distance bushes needed Keine Distanzbuchse	No necesario piezas distanciadoras Brak koniecznosci stosowania tuleji dystansowych -
●	Inbraakwerende kogel Bille anti-vol Anti-burglar ball Einbruchhemmende Kugel	Bola proteccion antirobbo Kulka antywlamaniowa -
	Dieveklauw Pene anti-degondage Anti-lift pin Sicherheitsbolzen	Perno antielevador Bolec antywywazeniowy -
	Kozijndorpelveer Pivot de frein aerien Overhead closer Obentürschliesser	Muelle aereo Samozamykacz gorny -
	Vloerveer Pivot de frein au sol Floor closer Bodentürschliesser	Muelle pavimento puerta Samozamykacz podlogowy -

A

D0063003

SYMBOLENLIJST
LISTE DES SYMBOLES
LIST OF SYMBOLS
ZEICHENERKLAERUNG

A

	Eindstuk deurvleugel Pièce finale ouvr. porte End piece door vent Endkappe Türflügel	Tapeta hoja puerta Koncowka do skrzydla drzwiowego Terminale anta
	Eindstukken bodemprofiel Pièces finales profilé de seuil End pieces floor profile Endkappe Schwelle	Piezas terminales perfil suelo Koncowki profilu podlogowego Terminale soglia
	Eindstukken Z-T deur Bouchon profilé porte Z-T End pieces Z-T door Endkappe Z-T Tür	Tapetas puerta Z-T Element koncowy Z-T drzwi Terminale profili porte Z e T
	Afdichtingen dorpels Profilés latéral pour bavettes Sill end pieces Endstück für Wetterschenkel	Tapetas condensacion Koncowki do profili podokiennych Coprifilo terminale
	Glassteunen Supports cale de vitrage Glazing supports Klotzbrücken	Soportes vidrio Podporka pod przeszklenie Supporti per vetro
	Afdekkap voor waterafvoersleuven Capuchon écoulement d'eau Weep hole cover Abdeckkappe Entwässerung	Deflector aire Maskownica otworu drenazowego Paratempesta
	Eindstukken stolpprofielen Bouchons double ouvrant End parts double casement profile Endkappe Stulpprofil	Tapetas perfil doble hoja Koncowka profilu ruchomego slupka Parte finale di un profilo ad inversione
	Koppelstuk Piece de raccordement Connection piece Kupplungsstueck	Pieza de union Element Laczacy -
	Eindstukken voor stolpprofielen Bouchons pièce finale pour profilé double ouvrant End parts for double casement profiles Endkappen für Stulpprofile	Tapeta perfil doble hoja Koncowka profilu ruchomego slupka -
	Afdichting goot Fermeture gouttière End piece gutter Endkappe Rinne	Tapetas canal Koncowka rynny -
	Eindstuk Piece finale End piece Endkappe	Terminal Koncowka Terminale
	Stootplaat Arrêt vitrage toiture Glass panel stop Endstück Verglasung	Tope del panel de vidrio Ogranicznik wypelnienia -
1	Veranda type 1 Veranda type 1 Veranda type 1 Veranda Typ 1	Veranda tipo 1 Weranda typu 1 -

	Binnenbeglazingsdichting Joint à bourrer Inner glazing gasket Innenverglasungsdichtung	Junta de acristalado interior Uszczelka przyszybowa wewnetrzna Guarnizione del vetro interna
	Buitenbeglazingsdichting Joint de vitrage extérieur Outer glazing gasket Aussenverglasungsdichtung	Junta de acristalado exterior Uszczelka przyszybowa zewnetrzna Guarnizione del vetro esterna
	Buitenbeglazingsdichting Joint de vitrage extérieur Outer glazing gasket Aussenverglasungsdichtung	Junta de acristalado exterior Uszczelka przyszybowa zewnetrzna Guarnizione del vetro esterna
	Akoestische dichting Joint acoustique Acoustical seal gasket Flügelaufschlagdichtung	Junta acustica Uszczelka akustyczna Guarnizione di isolamento acustico
	Middendichtingen Joints centraux Central gaskets Mitteldichtungen	Junta central Uszczelka centralna Guarnizione centrale
	Aanslagdichting Joint de butée Butt strip Anschlagdichtung	Junta tope Uszczelka Guarnizione di battuta
	Dilatatiedichtingen Joints de dilatation Expansion gaskets Dehnungsdichtungen	Junta de dilatacion Uszczelka dylatacyjna Guarnizione di espansione
	Dichting Joint Gasket Dichtung	Junta Uszczelka Guarnizione
	Dichting Joint Gasket Dichtung	Junta Uszczelka Guarnizione
	Afdichtingsstuk Pièce d'étanchéité Sealing piece Abdichtung	Pieza de sellado Element uszczelniajacy Sigillante
	Dichting veranda Joint véranda Gasket veranda Dichtung Wintergarten	Junta veranda Uszczelka do werandy -
	Borsteldichtingen Joints brosse Brushes Bürstendichtungen	Cepillos Szczotki Spazzole
	Isolerend vulstuk Pièce de remplissage isolante Insulating filling piece Isolierendes Füllstück	Pieza de relleno aislante Wkladka izolacyjna -
	Einddichting Joint d'assemblage End gasket Enddichtung	Junta Uszczelka koncowa Guarnizione

D0065223

SYMBOLENLIJST
LISTE DES SYMBOLES
LIST OF SYMBOLS
ZEICHENERKLAERUNG

REYNAERS aluminium

A

Stolp-kipraam Fenêtre double ouvr.-batt. Double casem.-tilt window Stulpfenster D/DK	Ventana abatible doble hoja Okno rozwierano-uchylne dwuskrzydlowe Finestra a 2 ante ribalta	
Draaikip Oscillo-battant Turn and tilt Drehkipp	Oscilobatiente Okno rozwierno-uchylne Anta ribalta	
Kipdraai Battantes-ouvrantes Tilt and turn Kippdreh	Batiente oscilante Okno uchylno-rozwierane Anta ribalta inversa	
Draairaam Fenêtre ouvrante Side-hung window Drehfenster	Ventana practicable Okno rozwierane Battente	
Stolpraam Fenêtre double ouvrant Double casement window Stulp-Flügel Fenster	Ventana doble hoja Okno rozwierane wuskrzydlowe Finestra a 2 ante	
Valraam Fenêtre à soufflet Bottom hung window Kipp-Fenster	Ventana abatible Okno uchylne Wasistas	
Afstandbedieningen valraam Commandes à distance pour fenêtre à soufflet Remote control for fanlight window Oberlichtbeschlag für Kipp-Flügel	Funcionamiento a distancia para ventana de techo Mechanizm do dystansowego uchylania okien -	
Buitendraaiend raam Fenêtre ouvrant vers l'extérieur Outside opening window Nach aussen öffnendes Fenster	Ventana apertura exterior Okno otwierane na zewnatrz Finestra ad apertura esterna	
Uitzetzakraam Châssis à l'Italienne Top-hung window Senk-Klappfenster	Ventana proyectante con compas Okno wychylne na zewnatrz Sporgere con frizioni	
Tuimel- en taatsraam Châssis pivotant Pivot window Schwingflügel	Ventana pivotante Okno obrotowe -	
Vouwdeur (MP) Porte pliante (MP) Folding door (MP) Falttür (MP)	Puerta plegable (MP) Drzwi harmonijkowe (MP) -	
Schuifkip (TF) Coulissant-tombant (TF) Slide and tilt (TF) Schiebekipptür (TF)	Paralela Uchylno-przesuwny -	
Schuifraam Fenêtre coulissante Sliding window Schiebefenster	Ventana corredera Okno przesuwne -	
Parallel opengaand raam Fenêtre ouvrant parallele Parallel opening window Parallelausstellfenster	Ventana proyectante paralela Okno rownolegle wysuwane na zewnatrz Sporgere parallelo	
Kipraam Fenêtre battante Tilt window Kippfenster	Oscilo Okno uchylne -	
Dubbele deur buitendraaiend Porte double ouvrant vers l'ext. Double door outward opening Zweiflügelige Tür aussen öffnend	Puerta doble apertura exterior Drzwi dwuskrzydlowe otw. na zew. -	
Deur binnendraaiend Porte ouvrant vers l'int. Door inward opening Tür nach innen öffnend	Puerta apertura interior Drzwi otw. do wewnatrz Porta apertura interna	
Deur buitendraaiend Porte ouvrant vers l'ext. Door outward opening Tür aussen öffnend	Puerta apertura exterior Drzwi otw. na zewnatrz Porta apertura esterna	

Paniekdeur Porte de panique Panic door Paniktür	Puenta antipánico Drzwi antypaniczne -	
Diversen Divers Miscellaneous Diverse	Diversos Elementy uzupelniajace Varie	
Klemstuk Clip Clip Federklemme	Clip Uchwyt Clip	
Nokbevestiging Fixation de la faîtière Fixation of the ridge Firstanschluss	Fijacion del resalte Element mocujacy kalenicowy -	
Isolatie Isolant Insulation Isolation	Aislamiento Izolacyja -	
Brievenkleppen Entrées de courrier Letter boxes Briefeinwurf	Buzones Skrzynka na listy -	
Automatische deurdichtingen Fermetures automatiques Automatic door latches Automatische Türdichtungen	Cierrapuertas automaticos Drzwiowa automat. opadajaca listwa Dispositivo di chiusura soglia	
Variant Variante Variant Variante	Variante Wariant Variante	
Verankeringen Ancrages Fixing lugs Verankerungen	Anclajes Kotwy Ancoraggio	
Sluitpennen en sluitstukken Rouleaux et gâches Lock pins and lock plates Schliessrollen und Schliessstücke	Bulones y cerraderos Plytka i kolek ryglujacy -	
Goot Gouttière Gutter Rinne	Canal Rynna -	
Dakvenster Tabatière Attic window Dachfenster	Ventana de techo Okno dachowe Lucernario	
Kunststof dakbedekking Toiture synthétique Synthetic roofing Kunststoff Dachdeckung	Cubierta en material sintetico Wypelnienie poliweglanem na dachy -	
Zelfklevende dubbelzijdige tape Bande autocollante 2 faces Self-adhesive double sided tape Selbstklebendes beidseitiges Band	Cinta autoadhesiva de dos caras -	
Domotica Domotique Domotics Domotik	Domótica Domotica -	
Profielen met hoge isolatiewaarde Profilés avec valeur d'isolation élevée Profiles with high insulation value Profile mit höhem Isolationwert	Perfiles alto aislamiento térmico Profile o wysokiej izolacyjnosci termicznej -	
Wielen Galets Rollers Laufwagen	Ruletas Wozki Carrelli	
Regeltringels Tringles de réglage Adjustment rods Regulierstange	Varilla de ajuste Listwy regulacyjne -	
Geleidingsplaat Guide Guide plate Führung	Placa guia Element naprowadzajacy -	

D0065224

SYMBOLENLIJST
LISTE DES SYMBOLES
LIST OF SYMBOLS
ZEICHENERKLAERUNG

A

	Gereedschap Outillage Tool Werkzeug	Util Narzedzie Utensile
	Gereedschappen en machines voor ontwatering van kader Outillage et machinerie pour drainage dormant Tools and machinery for draining outer frame Werkzeuge und Maschinen für Entwässerung Blendrahmen	Utiles y maquinaria para el drenaje del marco Narzedzia i maszyny do drenazy oscieznic Utensili e macchinari per il drenaggio del telaio
	Gereedschappen en machines voor ontwatering van vleugel Outillage et machinerie pour drainage ouvrant Tools and machinery for draining vent Werkzeuge und Maschinen für Entwässerung Flügel	Utiles y maquinaria para el drenaje de la hoja Narzedzia i maszyny do drenazy skrzydel Utensili e macchinari per il drenaggio dell'anta
	Gereedschappen en machines voor T-verbinding Outillage et machinerie pour jonction-T Tools and machinery for T-brackets Werkzeuge und Maschinen für T-Verbinder	Utiles y maquinaria para topes de unión Narzedzia i maszyny do polaczen teowych Utensili e macchinari per i giunti
	Gereedschappen en machines voor krukuitsparing Outillage et machinerie pour fermeture Tools and machinery for closure Werkzeuge und Maschinen für Beschläge	Utiles y maquinaria para el cierre Narzedzia i maszyny do zamkniec Utensili e macchinari per le chiusure
	Multifunctionele matrijs Matrice multifonctionnelle Multifunctional punch tool Mehrzweckstanzwerkzeug	Matriz multifuncional Wykrojnik wielofunkcyjny Punzonatrice multifunzionale
	Geleide matrijs Matrice guidée Punch tool Stanzwerkzeug	Matriz Wykrojnik Punzonatrice
	Handmatig gereedschap Outillage manuel Manual tools Handwerkzeuge	Util manual Narzedzie reczne Dime
	Freessjabloon Calibre de fraisage Stencil plate for milling head Fräseschablone	Plantilla para copiadora Szablon do frezarki Maschera per fresa
	Enkelkopse freesmachine Frais. à copier à une broche Copy router 1 spindle Einspindel-Kopierfräse	Copiadora de un cabezal Frezarka z jedna glowica Fresa di copia a 1 mandrino
	Frees- en boormachine Fraiseuse et foreuse Router and drilling machine Fräse- und Bohrgerät	Copiadora taladradora Frezarka z wiertarka Trapano e fresa
	Hydropneumatische pers Presse hydropneumatique Hydropneumatic press Hydropneumatische Presse	Prensa neumática Prasa hydropneumatyczna -
	Zaagmachine Tronçonneuse Sawing machine Kreissäge	Maquina de corte Pila do ciec przestrzennych Macchina per taglio
	Hoekenpers Sertisseuse Crimper Eckverbindungsmaschine	Ensambladora Zaciskarka narozy Cianfrinatrice
	Handmatrijs Matrice manuelle Manual punch tool Handstanzwerkzeug	Prensa manual Wykrojnik reczny Punzonatrice manuale
	Gereedschap voor lijminjectie Outillage pour encollage Tool for injection Werkzeug fuer klebeinjektion	Util para inyeccion Narzedzie do wtrysku kleju Utensile scarico per colla
	Gereedschap voor krukken Outillage pour cremones Tool for handles Werkzeug fuer Handhebel	Util para manetas Narzedzie do klamek Utensile per maniglie
	Gereedschap voor sluitlatten Outillage pour tringles Tool for linkbars Werkzeug fuer Schubstange	Util para barras union Narzedzie do listew sterujacych okuciami Utensile per barre di collegamento
	Gereedschap voor T-verbindingen Outillage pour connections-T Tool for T-connections Werkzeug fuer T-Verbindungen	Util para topes de union Narzedzie do polaczen Teowych Utensile per travesi
	Klemblokken Blocs de serrage Clamping blocks Spannbacken	Bloques de presión Bloki zaciskowe Blocchetti di supporto
	Gereedschap voor ontwatering buitenkaders Outillage pour drainage dormants Tool for drainage outer frames Werkzeug fuer Entwaesserung Blendrahmen	Util drenaje marco Narzedzie do drenazy oscieznic Utensile per drenaggio telaio
	Gereedschap voor hoekverbinding Outillage pour connection d'equerre Tool for corner connection Werkzeug fuer Eckverbindung	Util union esquina Narzedzie do polaczen narozynych Utensile per connessioni d'angolo
	Gereedschap voor montage Outillage pour montage Tool for assembly Werkzeug für Montage	Util para colocacion Narzedzie do montazu -
	Gereedschap voor deursluiter Outillage pour fermeture porte Tool for door closer Werkzeug für Türschliesser	Util para cierrapuertas Narzedzie do samozamykacza drzwiowego -
	Gereedschap voor scharnieren Outillage pour charnieres Tool for hinges Werkzeug für Bänder	Util para bisagras Narzedzie do zawiasy -
	Gereedschap voor sloten Outillage pour fermetures Tool for locks Werkzeug für Schlösser	Util para cerraduras Narzedzie do zamka -
	Gereedschap voor wisselprofielen Outillage pour chicanes Tool for sections Werkzeug für Wechselprofile	Util para encuentros centrales Narzedzie do przekrojow -
	Gereedschap voor beglazing Outillage pour vitrage Tool for glazing Werkzeug für Verglasung	Util para acristalamiento Narzedzie do przeszklen -
.....	Gereedschap voor diverse toepassingen Outillage pour applications divers Tool for miscellaneous applications Werkzeug für diverse Anwendungen	Utiles para varias aplicaciones Narzedzie do montazu elementow uzupelniajacych -

D0065225

SYMBOLENLIJST
LISTE DES SYMBOLES
LIST OF SYMBOLS
ZEICHENERKLAERUNG

	Gereedschap voor dichtingen Outillage pour joints Tool for gaskets Werkzeug für Dichtungen	Util para juntas Narzedzie do uszczelki -
	Gereedschap voor bevestiging wielen Outillage pour fixation des roulettes Tool for fixation rollers Werkzeug für Befestigung Laufräder	Util para fijación de ruletas Narzedzie do montazu wozkow -
	Gereedschap voor ontwatering vleugels Outillage pour drainage ouvrants Tool for drainage vents Werkzeug für Entwässerung Flügel	Util para drenaje hoja Narzedzie do drenazu skrzydla -
	Uitfrezing voor inbouw bovenspeun in kozijn Fraisage pour encastrement gond supérieur dans la fenêtre Milling for building in upper pivot in window Ausfräsung für Einbau eines oberen Lagers im Rahmen	Fresado para pivotante en marco superior Frez do montazu gornego sworznia w oknie - -
	Uitfrezing voor inbouw vloerspeun in vleugel Fraisage pour encastrement gond inférieur dans l'ouvrant Milling for building in floor pivot in vent Ausfräsung für Einbau eines Bodenlagers im Flügel	Fresado para pivotante en hoja inferior Frez do montazu dolnego sworznia w skrzydle - -
	Uitfrezing voor inbouw bovenspeun in vleugel Fraisage pour encastrement gond supérieur dans l'ouvrant Milling for building in upper pivot in vent Ausfräsung für Einbau eines oberen Lagers im Flügel	Fresado para pivotante en hoja superior Frez do montazu gornego sworznia w skrzydle - -
	Monteertafel Table de montage Assembly bench Montagetisch	Banco de montaje Stol montazowy -
	Elektrische aansluiting Fixation électrique Electric connection Elektrischer Anschluss	Conexión eléctrica Polaczenie elektryczne -
	Compressor Compresseur Compressor Kompressor	Compresor Kompresor -
	Kogel Dr. Hahn Bille Dr. Hahn Ball Dr. Hahn Kugel Dr. Hahn	Bola Dr. Hahn Kulka Dr. Hahn -
	Mechanische aansluiting Fixation mecanique Mechanical connection Mechanischer Anschluss	Conexión mecánica Polaczenie mechaniczne -
	Pneumatische aandrijving Propulsion pneumatic Pneumatic drive Pneumatische Antrieb	Destornillador neumatico Pneumatyczny naped -
	Ponsunit Unité d'étamper Punch unit Stanzeinheit	Punzon Wykrojnik -
	Land Pays Country Land	Pais Kraj -
L min	Min. profiellengte Longueur min. de profilé Min. length of profile Min. Profillänge	Longitud mínima del perfil Minimalna dlugosc profilu -
L max	Max. profiellengte Longueur max. de profilé Max. length of profile Max. Profillänge	Longitud máxima del perfil Maksymalna dlugosc profilu -
	Max. profielhoogte Hauteur max. de profilé Max. height of profiles Max. Profilhöhe	Altura máxima del perfil Maksymalna wysokosc profilu -
	Max. horizontale beweging Movement max. horizontale Max. horizontal movement Max. horizontale Versetzung	Movimiento horizontal máximo Maksymalny ruch poziomy -
	Horizontaal hoekbereik Intervalle d'équerre horizontale Horizontal corner range Eckbereich Horizontal	Rango de corte a inglete horizontal Zakres katow poziomych -
	Verticaal hoekbereik Intervalle d'équerre verticale Vertical corner range Eckbereich Vertikal	Rango de corte a inglete vertical Zakres katow pionowych XXX
M	Motor Moteur Motor Antrieb	Motor Silownik napedowy -
kg	Gewicht Poids Weight Gewicht	Pesos Ciezar -
	Max. toerental Vitesse d'axe max. Max. spindle speed Max. Drehzahl	Velocidad de sierra Maksymalna predkosc obrotowa -

A

D0065226

B

REYNAERS aluminium

Algemene informatie systemen
Généralités séries
General Information System
Allgemeine Information System

C

REYNAERS aluminium

Profielen

Profilés

Profiles

Profile

PROFIELLIJST
LISTE DES PROFILES
LIST OF PROFILES
PROFILLISTE

Art. N°			Art. N°		
038.0100.XX	56.C.002	D0061205			
038.0100.XX	56.C.008	D0061190			
038.0101.XX	56.C.002	D0061205			
038.0101.XX	56.C.008	D0061190			
038.0102.XX	56.C.002	D0061205			
038.0102.XX	56.C.010	D0061195			
038.0104.XX	56.C.004	D0061209			
038.0104.XX	56.C.016	D0067192			
038.0106.XX	56.C.002	D0061205			
038.0106.XX	56.C.009	D0061191			
038.0110.XX	56.C.002	D0061205			
038.0110.XX	56.C.010	D0061195			
038.0120.XX	56.C.002	D0061205			
038.0120.XX	56.C.008	D0061190			
038.0130.XX	56.C.003	D0061208			
038.0130.XX	56.C.011	D0061196			
038.0160.XX	56.C.003	D0061208			
038.0160.XX	56.C.012	D0061197			
038.0200.XX	56.C.004	D0061209			
038.0200.XX	56.C.015	D0061199			
038.0210.XX	56.C.003	D0061208			
038.0210.XX	56.C.013	D0061198			
038.0211.XX	56.C.003	D0061208			
038.0211.XX	56.C.014	D0061200			
038.0215.XX	56.C.003	D0061208			
038.0215.XX	56.C.013	D0061198			
038.0220.XX	56.C.004	D0061209			
038.0220.XX	56.C.015	D0061199			
038.0230.XX	56.C.004	D0061209			
038.0230.XX	56.C.015	D0061199			
038.1000.XX	56.C.001	D0061203			
038.1000.XX	56.C.005	D0061182			
038.1001.XX	56.C.001	D0061203			
038.1001.XX	56.C.005	D0061182			
038.1002.XX	56.C.001	D0061203			
038.1002.XX	56.C.005	D0061182			
038.1003.XX	56.C.001	D0061203			
038.1003.XX	56.C.005	D0061182			
038.1004.XX	56.C.001	D0061203			
038.1004.XX	56.C.006	D0061186			
038.1005.XX	56.C.001	D0061203			
038.1005.XX	56.C.006	D0061186			
038.1006.XX	56.C.001	D0061203			
038.1006.XX	56.C.006	D0061186			
0B0.0901.XX	56.C.003	D0061208			
0B0.0901.XX	56.C.011	D0061196			
0B0.1601.XX	56.C.003	D0061208			
0B0.1601.XX	56.C.011	D0061196			
0M0.3003.XX	56.C.002	D0061205			
0M0.3003.XX	56.C.011	D0061196			

C

LAMEL
LAME
LOUVRE
LAMELLE

	A dm²/m	P dm²/m	Lm	Ix cm⁴	Iy cm⁴
038.1000.XX	25.41	25.4	7.00	4.061	66.482
038.1001.XX	29.47	29.5	7.00	5.904	101.548
038.1002.XX	37.67	37.7	7.00	12.444	220.669
038.1003.XX	41.73	41.7	7.00	17.128	314.751
038.1004.XX	51.76	51.8	7.00	28.005	625.219
038.1005.XX	61.82	61.8	7.00	44.002	1139.208
038.1006.XX	82.14	82.1	7.00	120.307	2617.175

	A dm²/m	P dm²/m	Lm	Ix cm⁴	Iy cm⁴

C

D0061203

DRAAGARM
BRAS-SUPPORT
SUPPORT ARM
TRAGARM

		Lm	Ix cm⁴	Wx cm³	ax mm	Iy cm⁴	Wy cm³	ay mm	
038.0100.XX	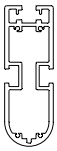	7.00	273.649	39.758	68.83	44.347	19.710	22.50	
038.0101.XX	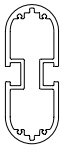	7.00	190.887	32.354	59.00	35.336	15.705	22.50	
038.0120.XX	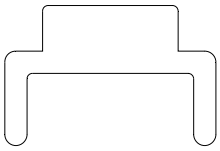	7.00	0.104	0.131	7.92	0.355	0.374	9.50	
038.0106.XX	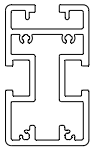	7.00	66.772	17.422	38.33	26.193	11.641	22.50	

HULPPROFIEL DRAAGARM
PROFILE DE RACCORDEMENT BRAS-SUPPORT
ADDITIONAL PROFILE SUPPORT ARM
ZUSATZPROFIL TRAGARM

		Lm	Ix cm⁴	Wx cm³	ax mm	Iy cm⁴	Wy cm³	ay mm	
038.0102.XX	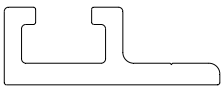	7.00	1.076	0.888	5.88	7.804	2.697	21.07	
038.0110.XX	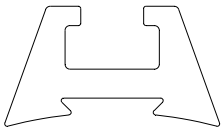	7.00	2.064	1.495	11.00	8.573	3.860	22.21	

RECHTHOEKIGE STAAF
BARRE RECTANGULAIRE
RECTANGULAR BAR
FLACHPROFIL

		Lm	Ix cm⁴	Wx cm³	ax mm	Iy cm⁴	Wy cm³	ay mm	
0M0.3003.XX		6.00	0.007	0.045	1.50	0.675	0.450	15.00	

D0061205

BUIS
TUBE
TUBE
ROHR

		Lm	Ix cm⁴	Wx cm³	ax mm	Iy cm⁴	Wy cm³	ay mm	
038.0130.XX	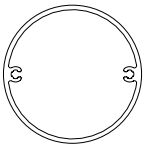	7.00	17.870	5.673	31.50	21.493	6.823	31.50	
0B0.1601.XX	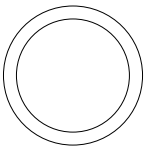	6.00	0.182	0.227	8.00	0.182	0.227	8.00	
0B0.0901.XX		6.00	0.020	0.045	4.50	0.020	0.045	4.50	

VERBINDINGSSTANG
TIGE DE RACCORDEMENT
CONNECTING ROD
VERBINDUNGSSTANGE

		Lm	Ix cm⁴	Wx cm³	ax mm	Iy cm⁴	Wy cm³	ay mm	
038.0160.XX		7.00	1.696	1.211	14.00	0.332	0.554	6.00	

DRAAGPROFIEL LOOPROOSTER
MENEAU CAILLEBOTIS
SUSPENSION PROFILE WALKWAY
PFOSTENPROFIL LAUFROSTE

		Lm	Ix cm⁴	Wx cm³	ax mm	Iy cm⁴	Wy cm³	ay mm	
038.0210.XX	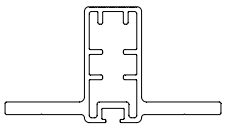	7.00	78.499	15.548	22.51	179.395	26.382	68.00	
038.0215.XX	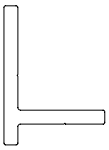	7.00	48.384	9.825	30.76	29.280	6.831	15.14	
038.0211.XX	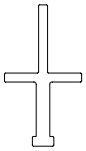	7.00	172.674	25.011	55.46	22.297	6.558	34.00	

C

D0061208

PROFIEL LOOPROOSTER
PROFILE DE CAILLEBOTIS
PROFILE WALKWAY
PROFIL LAUFROSTE

		A dm²/m	P dm²/m	Lm	Ix cm⁴	Iy cm⁴
038.0200.XX		19.83	5.4	7.00	10.876	0.447

AFDEKPROFIEL LOOPROOSTER
PROFILE DE RECOUVREMENT CAILLEBOTIS
COVERING PROFILE WALKWAY
ABDECKPROFIL LAUFROSTE

		A dm²/m	P dm²/m	Lm	Ix cm⁴	Iy cm⁴
038.0220.XX	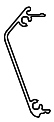	19.93	7.2	7.00	7.118	0.604

ZIJPROFIEL LOOPROOSTER
PROFILE DE RIVE CAILLEBOTIS
EDGE PROFILE WALKWAY
SEITENPROFIL LAUFROSTE

		A dm²/m	P dm²/m	Lm	Ix cm⁴	Iy cm⁴
038.0230.XX		29.71	29.7	7.00	58.844	3.918

DRAAGPROFIEL
MENEAU
SUSPENSION PROFILE
PFOSTENPROFIL

		A dm²/m	P dm²/m	Lm	Ix cm⁴	Iy cm⁴
038.0104.XX	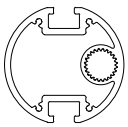	30.96	21.0	7.00	70.283	67.619

BS 100

LAMEL
LAME
LOUVRE
LAMELLE

	A dm²/m	P dm²/m	Lm	Ix cm⁴	Wx cm³	ax mm	Iy cm⁴	Wy cm³	ay mm
038.1000.XX	25.41	25.4	7.00	4.061	3.249	12.50	66.482	11.080	60.00
038.1001.XX	29.47	29.5	7.00	5.904	4.217	14.00	101.548	14.507	70.00
038.1002.XX	37.67	37.7	7.00	12.444	6.913	18.00	220.669	24.519	90.00
038.1003.XX	41.73	41.7	7.00	17.128	8.783	19.50	314.751	31.475	100.00

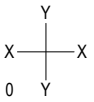

038.1000.XX

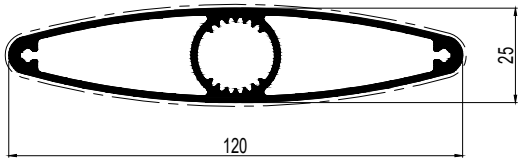

038.1001.XX

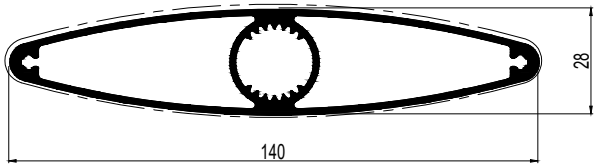

038.1002.XX

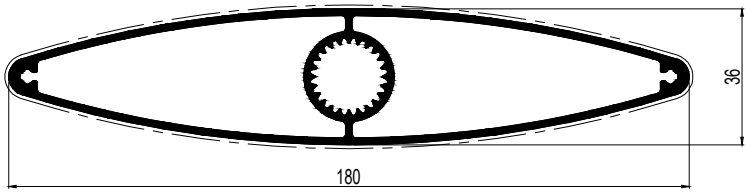

038.1003.XX

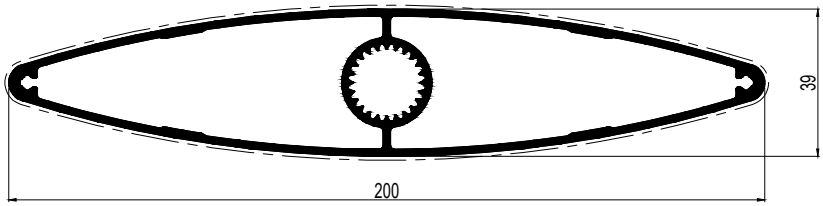

D0061182

C

BS 100

LAMEL
LAME
LOUVRE
LAMELLE

	A dm²/m	P dm²/m	Lm	Ix cm⁴	Wx cm³	ax mm	Iy cm⁴	Wy cm³	ay mm
038.1004.XX	51.76	51.8	7.00	28.005	12.876	21.75	625.219	50.018	125.00
038.1005.XX	61.82	61.8	7.00	44.002	18.145	24.25	1139.208	75.947	150.00
038.1006.XX	82.14	82.1	7.00	120.307	37.596	32.00	2617.175	130.859	200.00

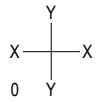

038.1004.XX

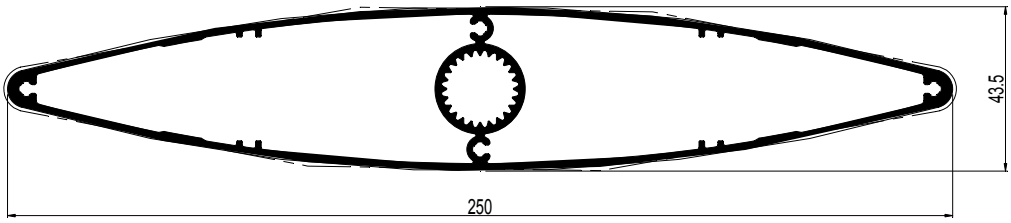

038.1005.XX

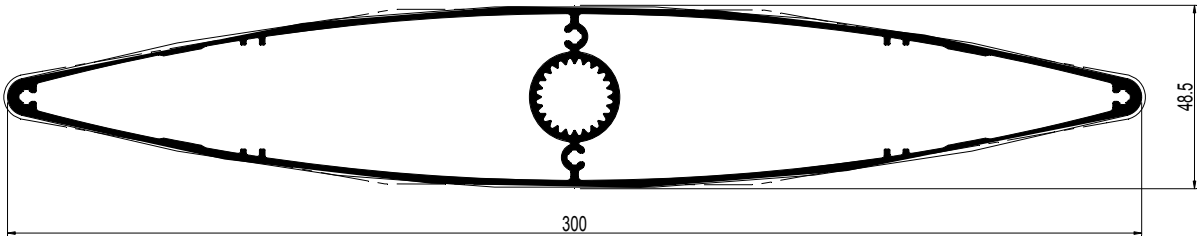

038.1006.XX

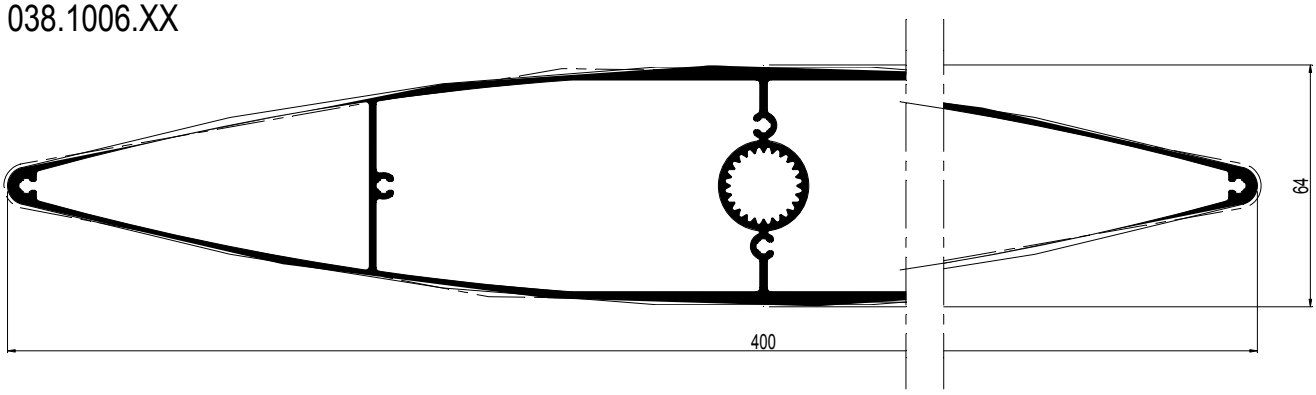

D0061186

C

BS 100

DRAAGARM
BRAS-SUPPORT
SUPPORT ARM
TRAGARM

	A dm²/m	P dm²/m	Lm	Ix cm⁴	Wx cm³	ax mm	Iy cm⁴	Wy cm³	ay mm
038.0100.XX	50.95	37.4	7.00	273.649	39.758	68.83	44.347	19.710	22.50
038.0101.XX	36.19	31.8	7.00	190.887	32.354	59.00	35.336	15.705	22.50
038.0120.XX	7.28	1.3	7.00	0.104	0.131	7.92	0.355	0.374	9.50

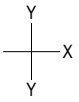

038.0100.XX

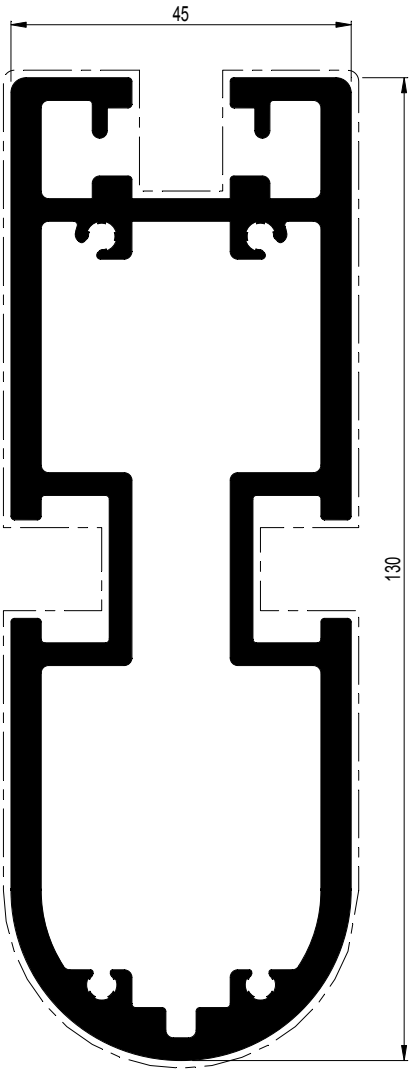

038.0101.XX

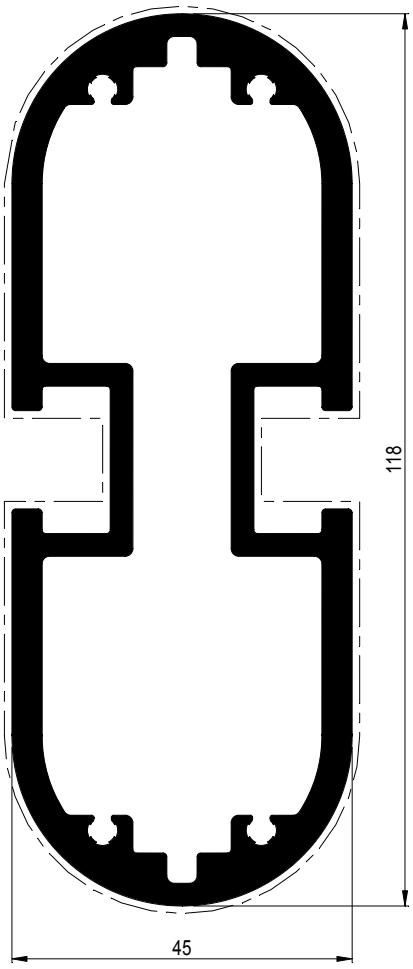

038.0120.XX

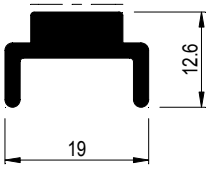

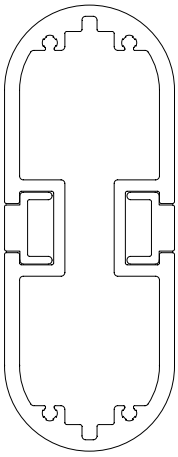

D0061190

C

BS 100

DRAAGARM
BRAS-SUPPORT
SUPPORT ARM
TRAGARM

	A dm²/m	P dm²/m	Lm	Ix cm⁴	Wx cm³	ax mm	Iy cm⁴	Wy cm³	ay mm
038.0106.XX	40.47	27.6	7.00	66.772	17.422	38.33	26.193	11.641	22.50

038.0106.XX

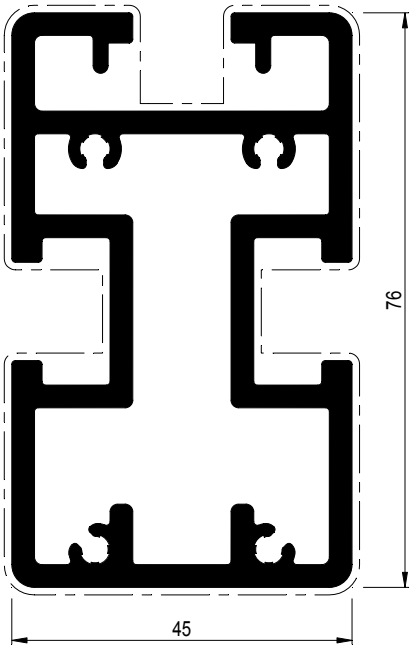

C

D0061191

BS 100

HULPPROFIEL DRAAGARM
PROFILE DE RACCORDEMENT BRAS-SUPPORT
ADDITIONAL PROFILE SUPPORT ARM
ZUSATZPROFIL TRAGARM

	A dm²/m	P dm²/m	Lm	Ix cm⁴	Wx cm³	ax mm	Iy cm⁴	Wy cm³	ay mm
038.0102.XX	16.92	10.0	7.00	1.076	0.888	5.88	7.804	2.697	21.07
038.0110.XX	17.20	9.6	7.00	2.064	1.495	11.00	8.573	3.860	22.21

038.0102.XX

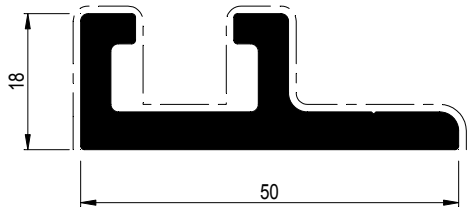

038.0110.XX

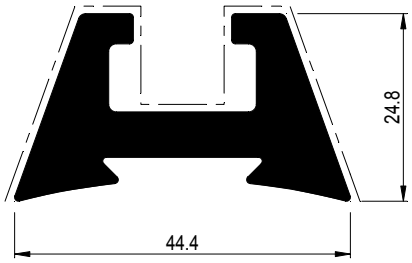

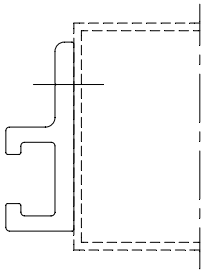

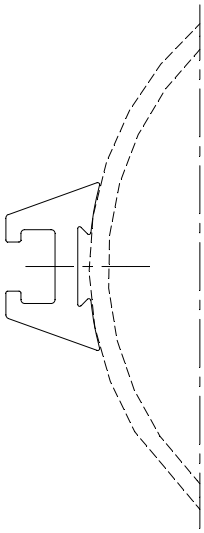

D0061195

BS 100

BUIS
TUBE
TUBE
ROHR

	A dm²/m	P dm²/m	Lm	Ix cm⁴	Wx cm³	ax mm	Iy cm⁴	Wy cm³	ay mm
038.0130.XX	19.79	19.8	7.00	17.870	5.673	31.50	21.493	6.823	31.50
0B0.0901.XX	2.83	2.8	6.00	0.020	0.045	4.50	0.020	0.045	4.50
0B0.1601.XX	5.03	5.0	6.00	0.182	0.227	8.00	0.182	0.227	8.00
0M0.3003.XX	6.60	3.6	6.00	0.007	0.045	1.50	0.675	0.450	15.00

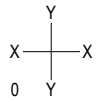

038.0130.XX

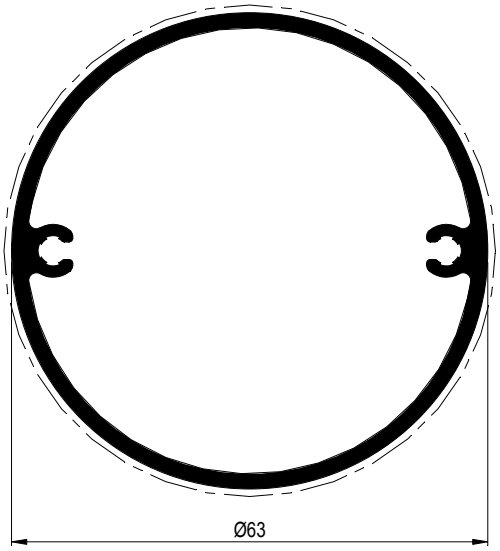

0B0.1601.XX

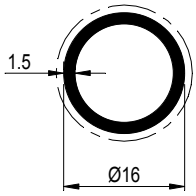

0B0.0901.XX

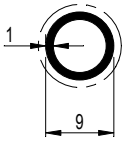

0M0.3003.XX

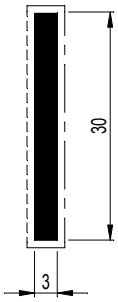

D0061196

C

BS 100

VERBINDINGSSTANG
TIGE DE RACCORDEMENT
CONNECTING ROD
VERBINDUNGSSTANGE

	A dm²/m	P dm²/m	Lm	Ix cm⁴	Wx cm³	ax mm	Iy cm⁴	Wy cm³	ay mm	
038.0160.XX	6.97	7.0	7.00	1.696	1.211	14.00	0.332	0.554	6.00	Y X X 0 Y

038.0160.XX

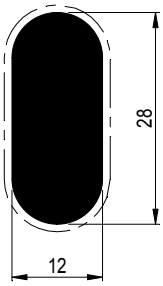

C

D0061197

BS 100

DRAAGPROFIEL LOOPROOSTER
MENEAU CAILLEBOTIS
SUSPENSION PROFILE WALKWAY
PFOSTENPROFIL LAUFROSTE

	A dm²/m	P dm²/m	Lm	Ix cm⁴	Wx cm³	ax mm	Iy cm⁴	Wy cm³	ay mm
038.0210.XX	44.36	42.7	7.00	78.499	15.548	22.51	179.395	26.382	68.00
038.0215.XX	27.30	27.3	7.00	48.384	9.825	30.76	29.280	6.831	15.14

038.0210.XX

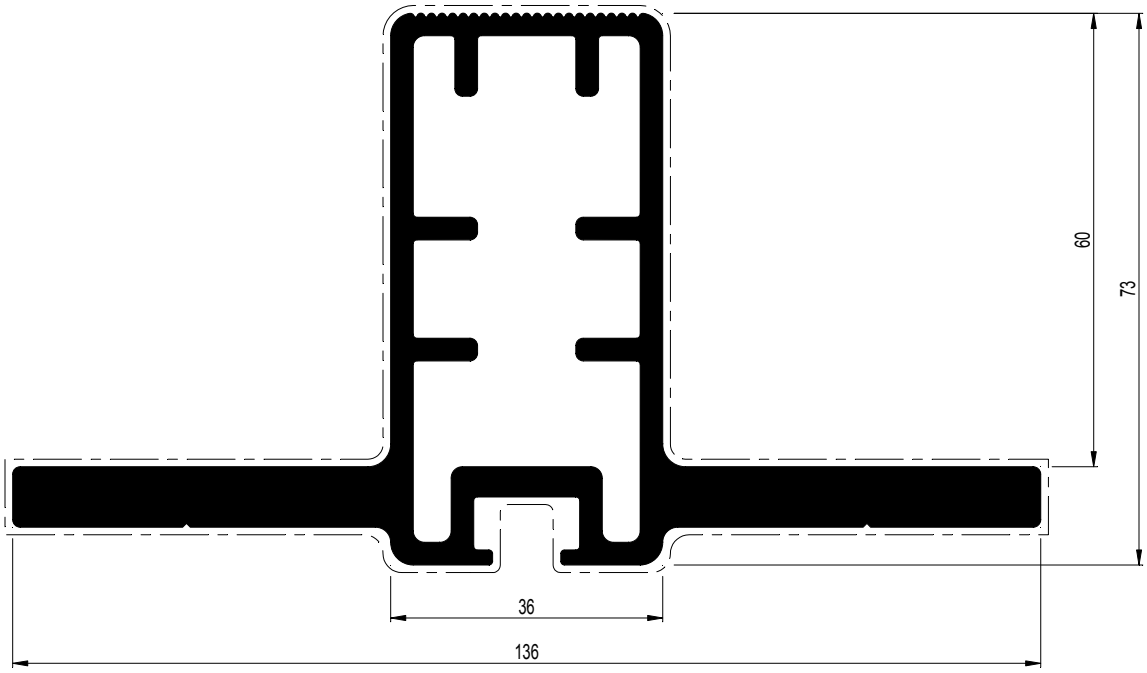

038.0215.XX

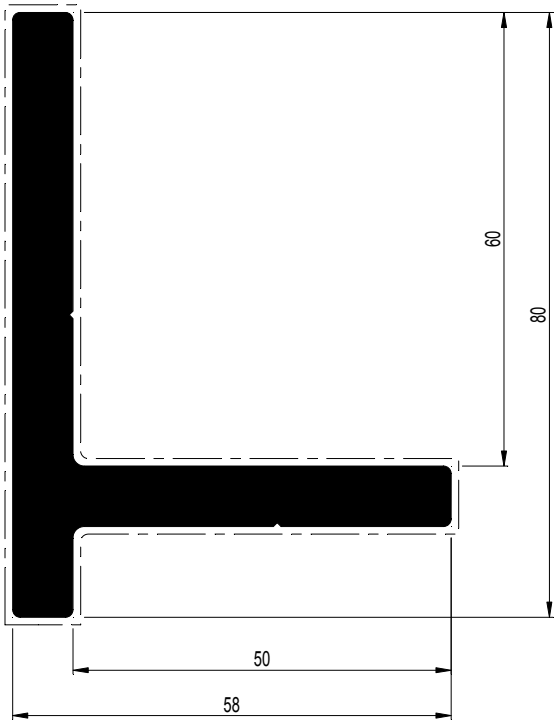

D0061198

C

BS 100

PROFIEL LOOPROOSTER
PROFILE DE CAILLEBOTIS
PROFILE WALKWAY
PROFIL LAUFROSTE

	A dm²/m	P dm²/m	Lm	Ix cm⁴	Wx cm³	ax mm	Iy cm⁴	Wy cm³	ay mm
038.0211.XX	39.21	35.1	7.00	172.674	25.011	55.46	22.297	6.558	34.00

038.0211.XX

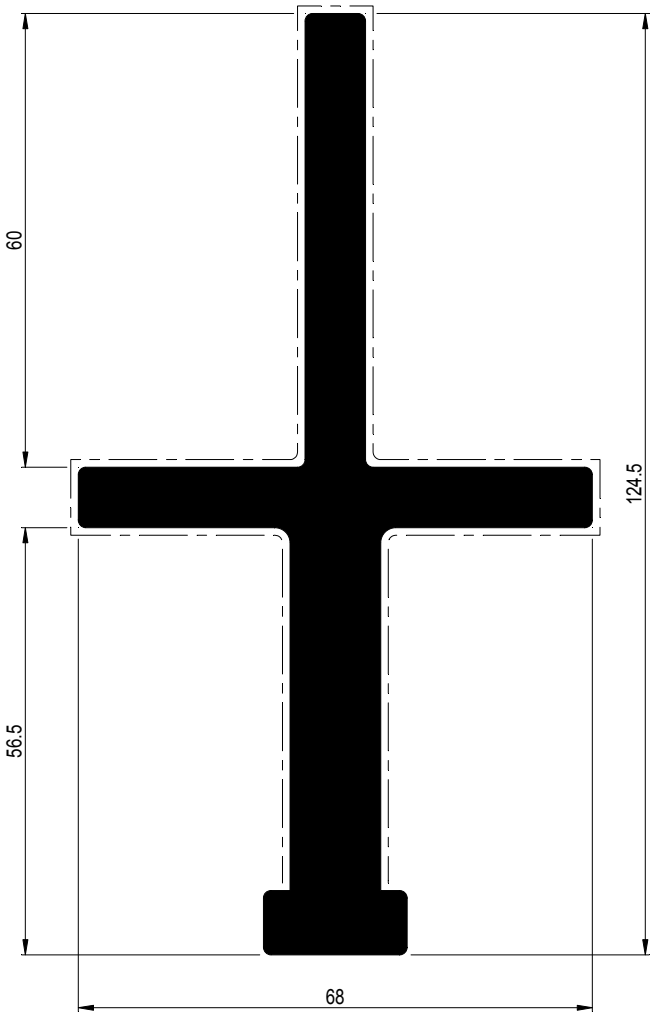

C

D0061200

BS 100

PROFIEL LOOPROOSTER
PROFILE DE CAILLEBOTIS
PROFILE WALKWAY
PROFIL LAUFROSTE

	A dm²/m	P dm²/m	Lm	Ix cm⁴	Wx cm³	ax mm	Iy cm⁴	Wy cm³	ay mm
038.0200.XX	19.83	5.4	7.00	10.876	3.046	35.70	0.447	0.358	12.50
038.0220.XX	19.93	7.2	7.00	7.118	2.369	30.05	0.604	0.435	11.00
038.0230.XX	29.71	29.7	7.00	58.844	9.821	50.08	3.918	1.803	8.27

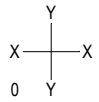

038.0200.XX

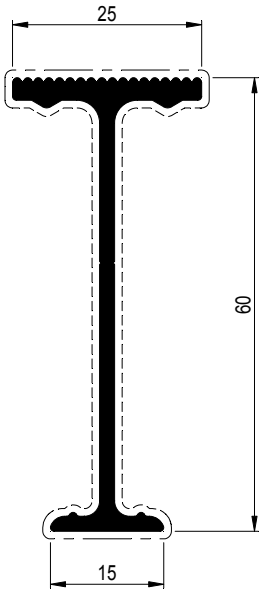

038.0220.XX

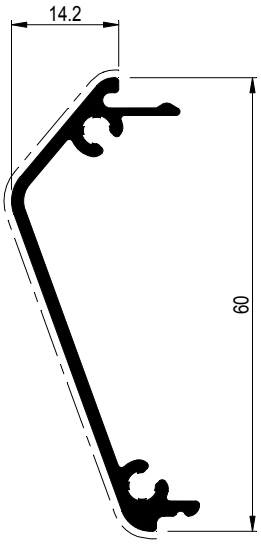

038.0230.XX

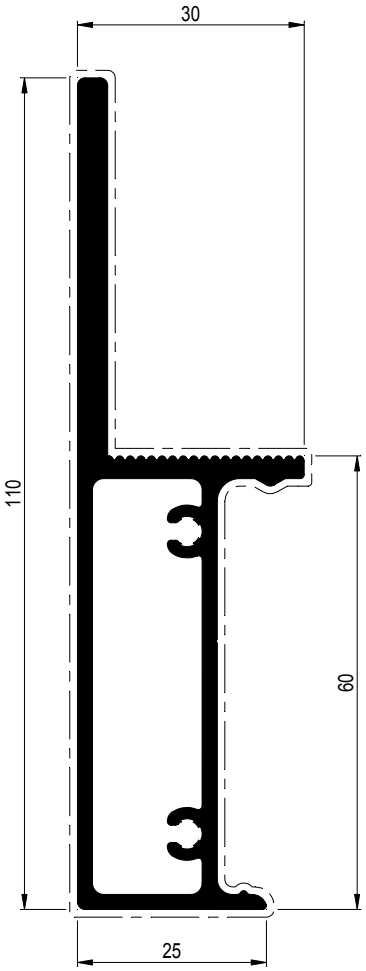

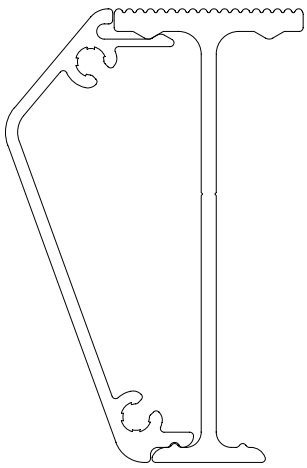

D0061199

C

BS 100

DRAAGPROFIEL GLASS LOUVRES
MENEAU GLASS LOUVRES
SUSPENSION PROFILE GLASS LOUVRES
PFOSTENPROFIL GLASS LOUVRES

	A dm²/m	P dm²/m	Lm	Ix cm⁴	Wx cm³	ax mm	Iy cm⁴	Wy cm³	ay mm
038.0104.XX	30.96	21.0	7.00	70.283	17.232	34.21	67.619	18.782	36.00

038.0104.XX

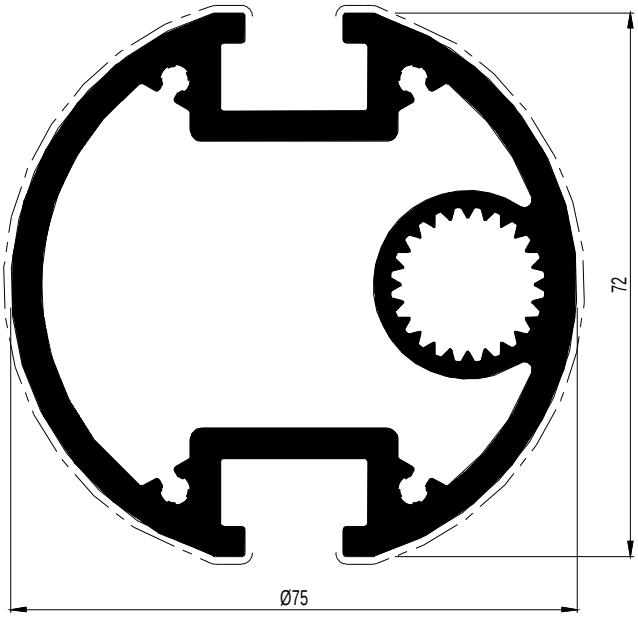

C

D0067192

DRAAGPROFIEL GLASS LOUVRES
MENEAU GLASS LOUVRES
SUSPENSION PROFILE GLASS LOUVRES
PFOSTENPROFIL GLASS LOUVRES

E

REYNAERS
aluminium

Werktekeningen
Coupes et débits
Work drawings
Werkzeichnungen

VASTE LAMELLEN IN VERTICAAL VLAK
LAMES FIXES DANS UN PLAN VERTICAL
FIXED LOUVRES IN A VERTICAL PLANE
FESTE LAMELLEN IN EINER VERTIKALE EBENE

BS 100

VASTE LAMELLEN IN VERTICAAL VLAK
LAMES FIXES DANS UN PLAN VERTICAL
FIXED LOUVRES IN A VERTICAL PLANE
FESTE LAMELLEN IN EINER VERTIKALE EBENE

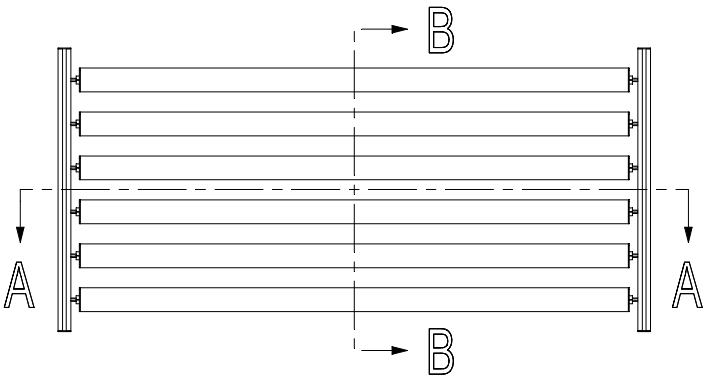

BINNENAANZICHT
VUE INTERIEURE
INSIDE VIEW
INNENSICHT

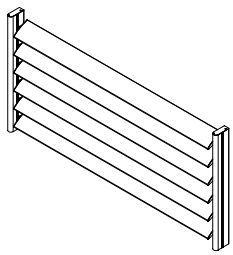

n = AANTAL LAMELLEN
n = NOMBRE DE LAMES
n = NUMBER OF LOUVRES
n = ANZAHL LAMELLEN

* PER LAMEL
* PAR LAME
* PER LOUVRE
* PER LAMELLE

			#	Lm	
038.0120.XX			2	H - 5	56.C...
			(n - 1) x 2	h - 90	
			4	H - 95 - h .(n - 1) / 2	
038.0100.XX			2	H - 5	56.C...
038.1002.XX			n	B - 111	56.C...

		#	
075.6100.XX		4	56.G...
052.5311.--		8	56.G...
075.6022.XX		2 *	56.G...
052.5311.--		4 *	56.G...
075.6088.--		2 *	56.G...

A - A

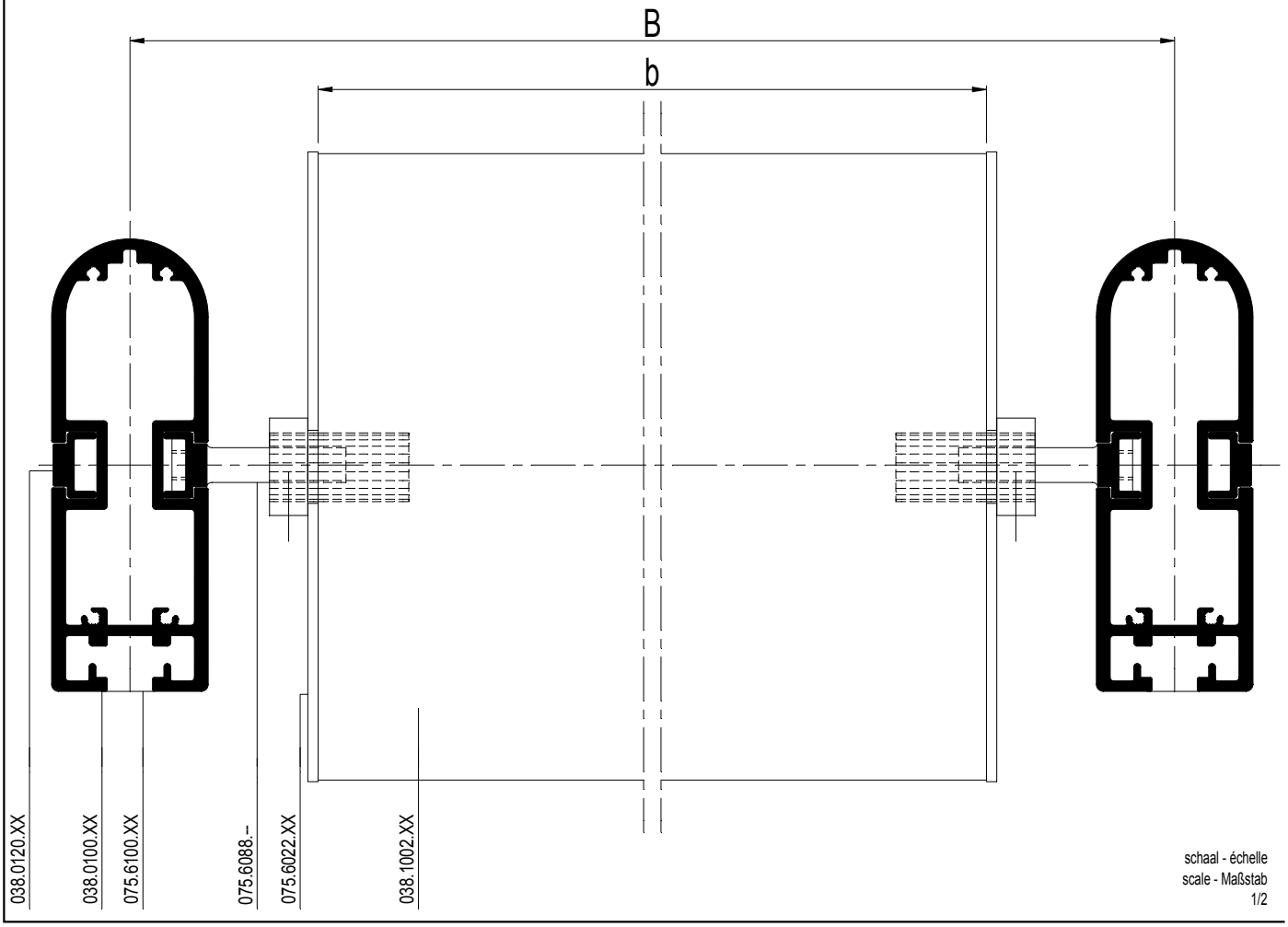

schaal - échelle
scale - Maßstab
1/2

D0061183

E

BS 100

VASTE LAMELLEN IN VERTICAAL VLAK
LAMES FIXES DANS UN PLAN VERTICAL
FIXED LOUVRES IN A VERTICAL PLANE
FESTE LAMELLEN IN EINER VERTIKALE EBENE

LAMELLENHELLING PENTE DES LAMES LAMELLA SLOPE LAMELLENNEIGUNG	0° / 15° / 30° / 45° / 60° / 75° / 90°

AFSTAND / BREEDTE / HOEKINCLINATIE LAMEL DISTANCE / LARGEUR / INCLINAISON D'ANGLE LAME DISTANCE / WIDTH / ANGLE INCLINATION LOUVRE ABSTAND / BREITE / WINKELINKLINATION LAMELLE	56.E.008-009

B - B

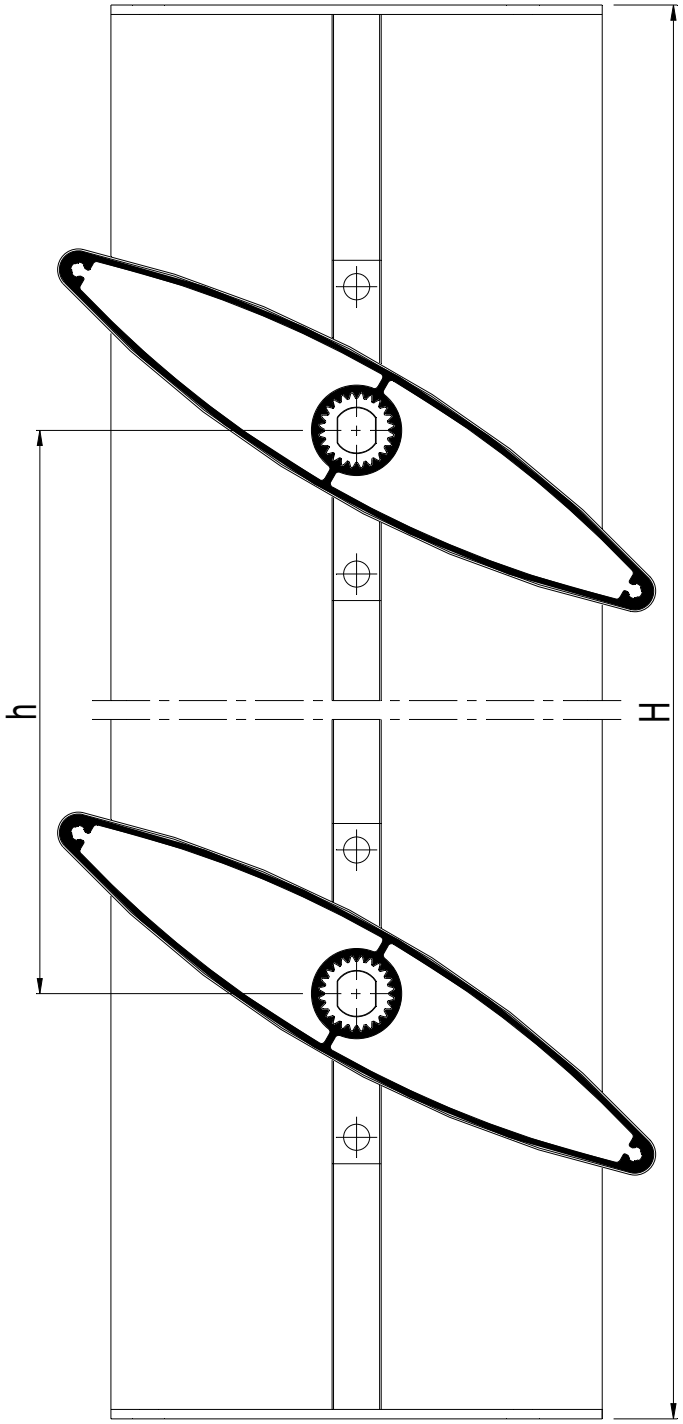

schaal - échelle
scale - Maßstab
1/2

D0061183

E

OVERZICHT VASTE LAMELLEN
APERCU LAMES FIXES
OVERVIEW FIXED LOUVRES
UEBERSICHT FESTE LAMELLEN

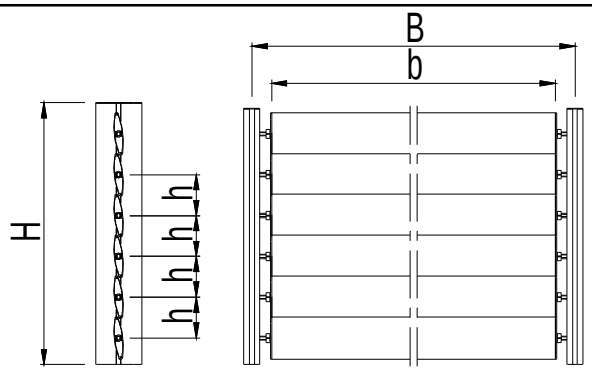

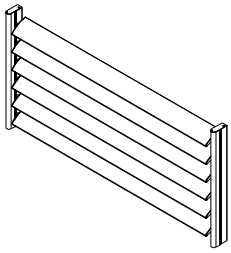

n = AANTAL LAMELLEN
n = NOMBRE DE LAMES
n = NUMBER OF LOUVRES
n = ANZAHL LAMELLEN

* PER LAMEL
* PAR LAME
* PER LOUVRE
* PER LAMELLE

		#	Lm	
038.0120.XX		2	H - 5	56.C...
		(n - 1) x 2	h - 90	
		4	H - 95 - h .(n - 1) / 2	
038.0100.XX		2	H - 5	56.C...
038.1000.XX		n	B - 111	56.C...

		#	
075.6100.XX		4	56.G...
052.5311.--		8	56.G...
075.6020.XX		2*	56.G...
052.5311.--		4*	56.G...
075.6088.--		2*	56.G...

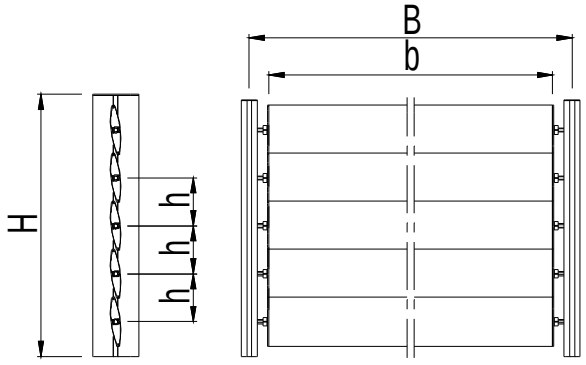

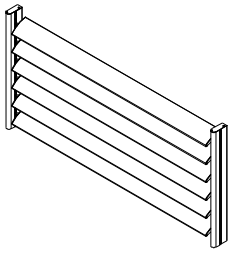

n = AANTAL LAMELLEN
n = NOMBRE DE LAMES
n = NUMBER OF LOUVRES
n = ANZAHL LAMELLEN

* PER LAMEL
* PAR LAME
* PER LOUVRE
* PER LAMELLE

		#	Lm	
038.0120.XX		2	H - 5	56.C...
		(n - 1) x 2	h - 90	
		4	H - 95 - h .(n - 1) / 2	
038.0100.XX		2	H - 5	56.C...
038.1001.XX		n	B - 111	56.C...

		#	
075.6100.XX		4	56.G...
052.5311.--		8	56.G...
075.6021.XX		2*	56.G...
052.5311.--		4*	56.G...
075.6088.--		2*	56.G...

D0062394

E

OVERZICHT VASTE LAMELLEN
APERCU LAMES FIXES
OVERVIEW FIXED LOUVRES
UEBERSICHT FESTE LAMELLEN

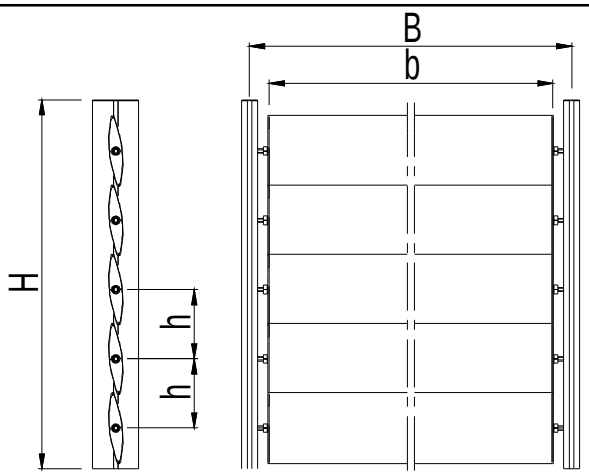

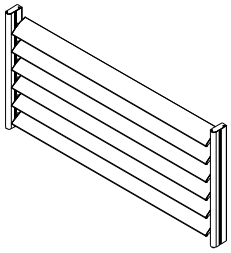

n = AANTAL LAMELLEN
n = NOMBRE DE LAMES
n = NUMBER OF LOUVRES
n = ANZAHL LAMELLEN

* PER LAMEL
* PAR LAME
* PER LOUVRE
* PER LAMELLE

		#	Lm	
038.0120.XX		2	H - 5	56.C...
		(n - 1) x 2	h - 90	
		4	H - 95 - h .(n - 1) / 2	
038.0100.XX		2	H - 5	56.C...
038.1003.XX		n	B - 111	56.C...

	#	
075.6100.XX	4	56.G...
052.5311.--	8	56.G...
075.6023.XX	2*	56.G...
052.5311.--	4*	56.G...
075.6088.--	2*	56.G...

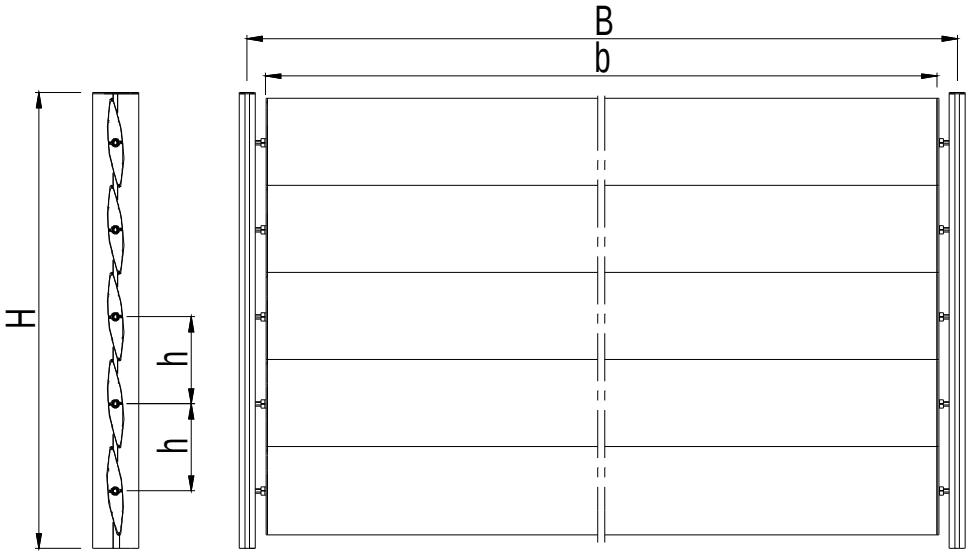

n = AANTAL LAMELLEN
n = NOMBRE DE LAMES
n = NUMBER OF LOUVRES
n = ANZAHL LAMELLEN

* PER LAMEL
* PAR LAME
* PER LOUVRE
* PER LAMELLE

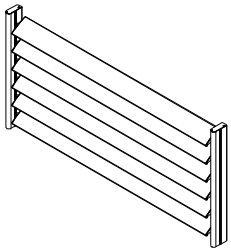

		#	Lm	
038.0120.XX		2	H - 5	56.C...
		(n - 1) x 2	h - 90	
		4	H - 95 - h .(n - 1) / 2	
038.0100.XX		2	H - 5	56.C...
038.1004.XX		n	B - 115	56.C...

	#	
075.6100.XX	4	56.G...
052.5311.--	8	56.G...
075.6024.XX	2*	56.G...
052.5311.--	8 *	56.G...
075.6088.--	2*	56.G...

E

D0062394

BS 100

OVERZICHT VASTE LAMELLEN
APERCU LAMES FIXES
OVERVIEW FIXED LOUVRES
UEBERSICHT FESTE LAMELLEN

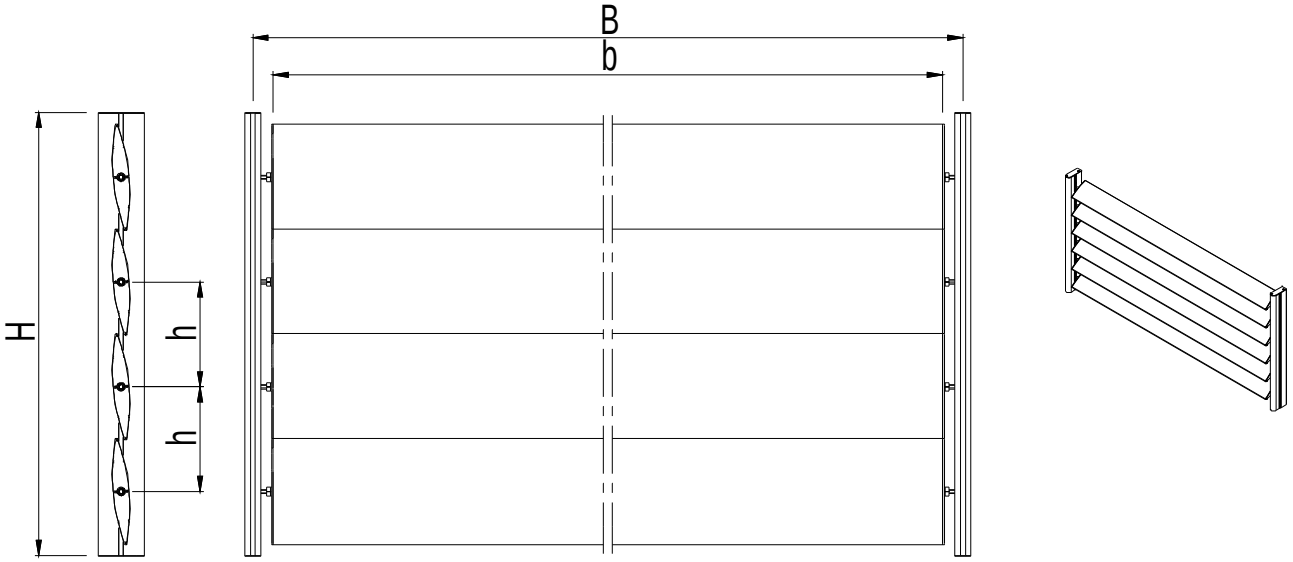

n = AANTAL LAMELLEN
n = NOMBRE DE LAMES
n = NUMBER OF LOUVRES
n = ANZAHL LAMELLEN

* PER LAMEL
* PAR LAME
* PER LOUVRE
* PER LAMELLE

			#	Lm	
038.0120.XX			2	H - 5	56.C...
			(n - 1) x 2	h - 90	
			4	H - 95 - h .(n - 1) / 2	
038.0100.XX			2	H - 5	56.C...
038.1005.XX			n	B - 115	56.C...

		#	
075.6100.XX		4	56.G...
052.5311.--		8	56.G...
075.6025.XX		2*	56.G...
052.5311.--		8 *	56.G...
075.6088.--		2*	56.G...

E

D0062409

OVERZICHT VASTE LAMELLEN
APERCU LAMES FIXES
OVERVIEW FIXED LOUVRES
UEBERSICHT FESTE LAMELLEN

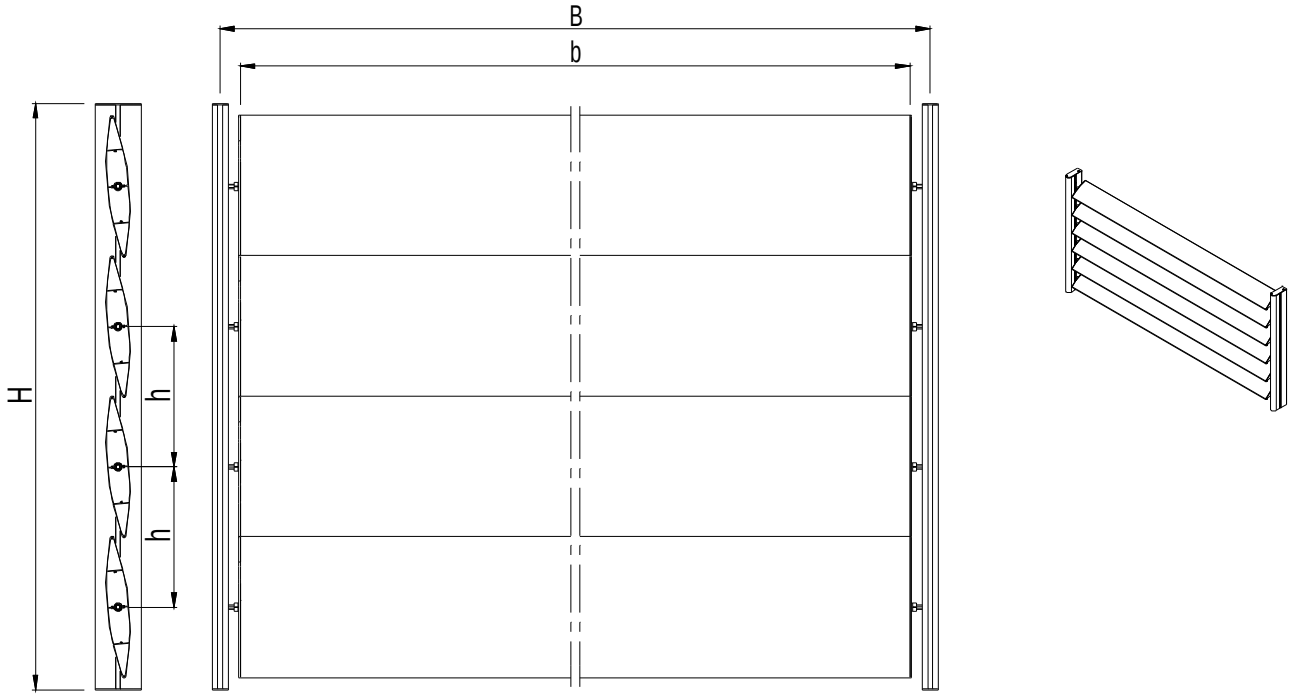

n = AANTAL LAMELLEN
n = NOMBRE DE LAMES
n = NUMBER OF LOUVRES
n = ANZAHL LAMELLEN

* PER LAMEL
* PAR LAME
* PER LOUVRE
* PER LAMELLE

			#	Lm	☞
038.0120.XX			2	H - 5	56.C...
			(n - 1) x 2	h - 90	
			4	H - 95 - h .(n - 1) / 2	
038.0100.XX			2	H - 5	56.C...
038.1006.XX			2	B - 115	56.C...

		#	☞
075.6100.XX		4	56.G...
052.5311.--		8	56.G...
075.6026.XX		2*	56.G...
052.5311.--		12 *	56.G...
075.6088.--		2*	56.G...

E

D0062409

AFSTAND / BREEDTE / HOEKINCLINATIE LAMEL
DISTANCE / LARGEUR / INCLINAISON D'ANGLE LAME
DISTANCE / WIDTH / ANGLE INCLINATION LOUVRE
ABSTAND / BREITE / WINKELINKLINATION LAMELLE

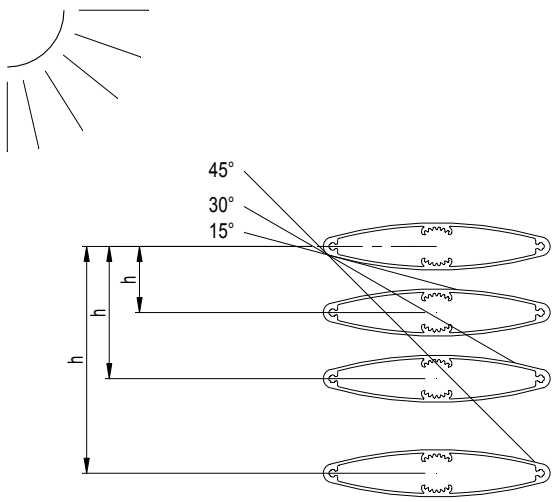

LAMELLENHELLING PENTE DES LAMES LAMELLA SLOPE LAMELLENNEIGUNG	0°

	Lw	h		
PR. NR.		15°	30°	45°
038.1000.XX	120 mm	35	70	120
038.1001.XX	140 mm	40	85	140
038.1002.XX	180 mm	55	105	180
038.1003.XX	200 mm	60	120	200
038.1004.XX	250 mm	70	145	250
038.1005.XX	300 mm	85	175	300
038.1006.XX	400 mm	110	235	400

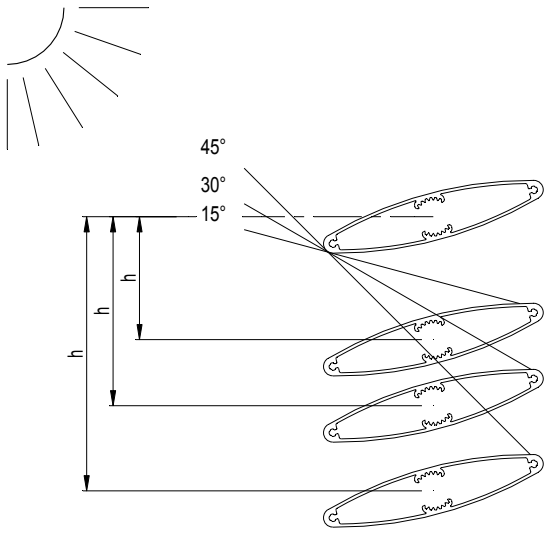

LAMELLENHELLING PENTE DES LAMES LAMELLA SLOPE LAMELLENNEIGUNG	15°

	Lw	h		
PR. NR.		15°	30°	45°
038.1000.XX	120 mm	65	100	145
038.1001.XX	140 mm	75	115	170
038.1002.XX	180 mm	95	145	220
038.1003.XX	200 mm	105	165	245
038.1004.XX	250 mm	130	205	305
038.1005.XX	300 mm	155	245	365
038.1006.XX	400 mm	210	325	485

Lw	LAMELLENBREEDTE LARGEUR DES LAMES LAMELLA WIDTH LAMELLENBREITE

h	LAMELLENAFSTAND DISTANCE DES LAMES LAMELLA DISTANCE LAMELLENABSTAND

D0061184

E

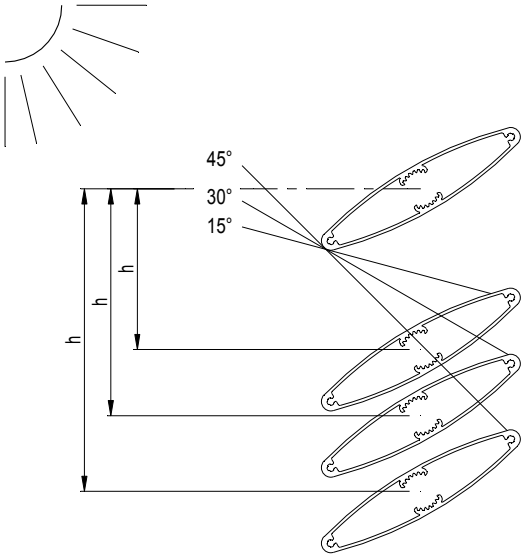

LAMELLENHELLING
PENTE DES LAMES
LAMELLA SLOPE
LAMELLENNEIGUNG
30°

	Lw	h		
PR. NR.		15°	30°	45°
038.1000.XX	120 mm	85	120	160
038.1001.XX	140 mm	100	140	185
038.1002.XX	180 mm	130	180	240
038.1003.XX	200 mm	145	200	270
038.1004.XX	250 mm	180	250	335
038.1005.XX	300 mm	220	300	405
038.1006.XX	400 mm	290	400	540

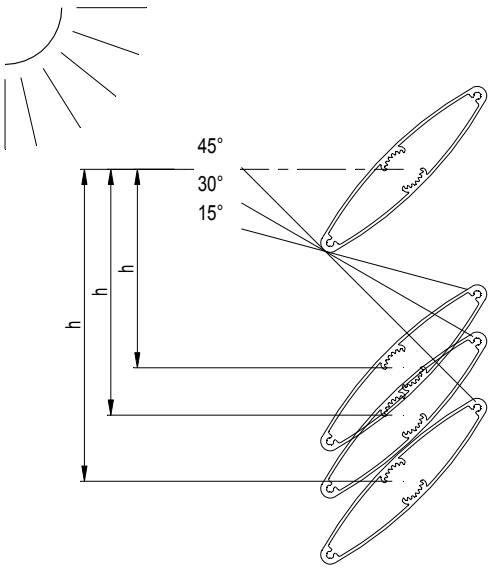

LAMELLENHELLING
PENTE DES LAMES
LAMELLA SLOPE
LAMELLENNEIGUNG
45°

	Lw	h		
PR. NR.		15°	30°	45°
038.1000.XX	120 mm	105	130	165
038.1001.XX	140 mm	125	155	195
038.1002.XX	180 mm	160	195	250
038.1003.XX	200 mm	175	220	280
038.1004.XX	250 mm	220	275	350
038.1005.XX	300 mm	265	330	420
038.1006.XX	400 mm	355	445	560

E

D0061184

BS 100

VASTE LAMELLEN IN HORIZONTAAL VLAK
LAMES FIXES DANS UN PLAN HORIZONTAL
FIXED LOUVRES IN A HORIZONTAL PLANE
FESTE LAMELLEN IN EINER HORIZONTALE EBENE

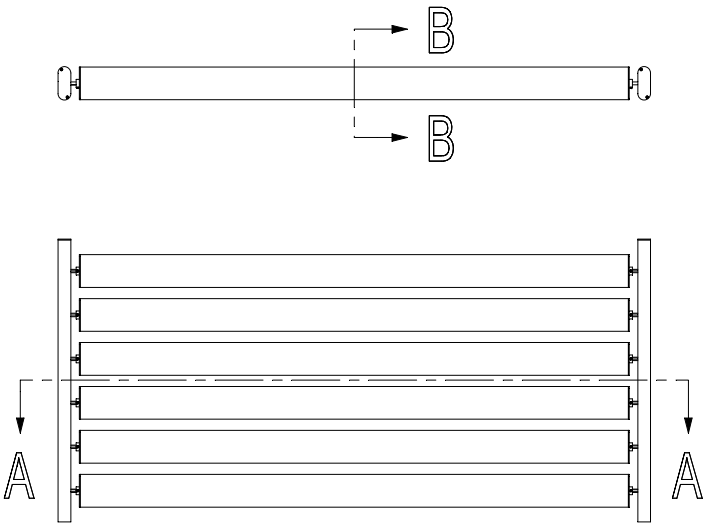

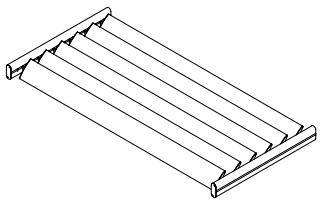

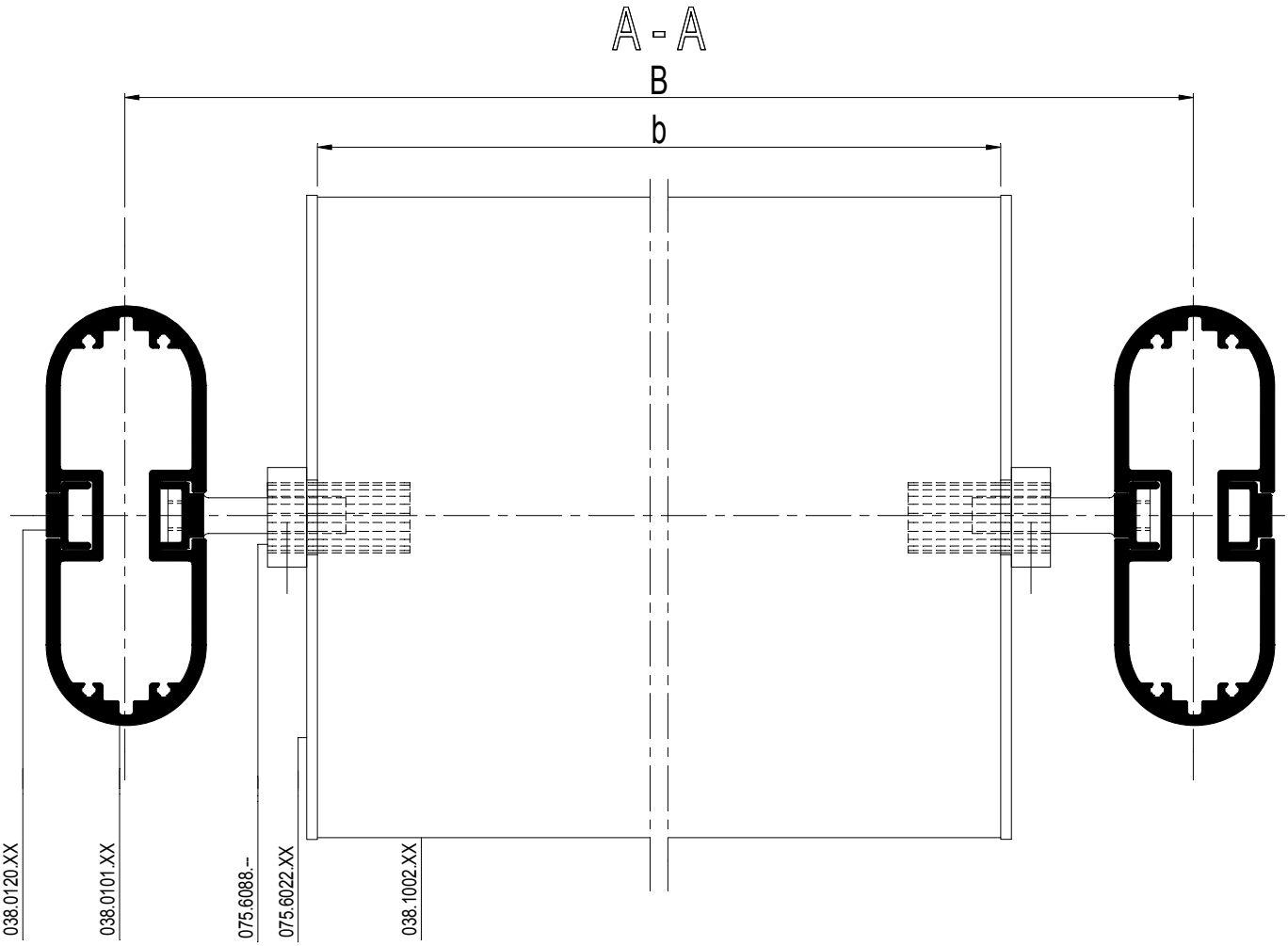

D0061189

E

VASTE LAMELLEN IN HORIZONTAAL VLAK
LAMES FIXES DANS UN PLAN HORIZONTAL
FIXED LOUVRES IN A HORIZONTAL PLANE
FESTE LAMELLEN IN EINER HORIZONTALE EBENE

LAMELLENHELLING PENTE DES LAMES LAMELLA SLOPE LAMELLENNEIGUNG	0° / 15° / 30° / 45° / 60° / 75° / 90°

AFSTAND / BREEDTE / HOEKINCLINATIE LAMEL DISTANCE / LARGEUR / INCLINAISON D'ANGLE LAME DISTANCE / WIDTH / ANGLE INCLINATION LOUVRE ABSTAND / BREITE / WINKELINKLINATION LAMELLE	56.E.016-017

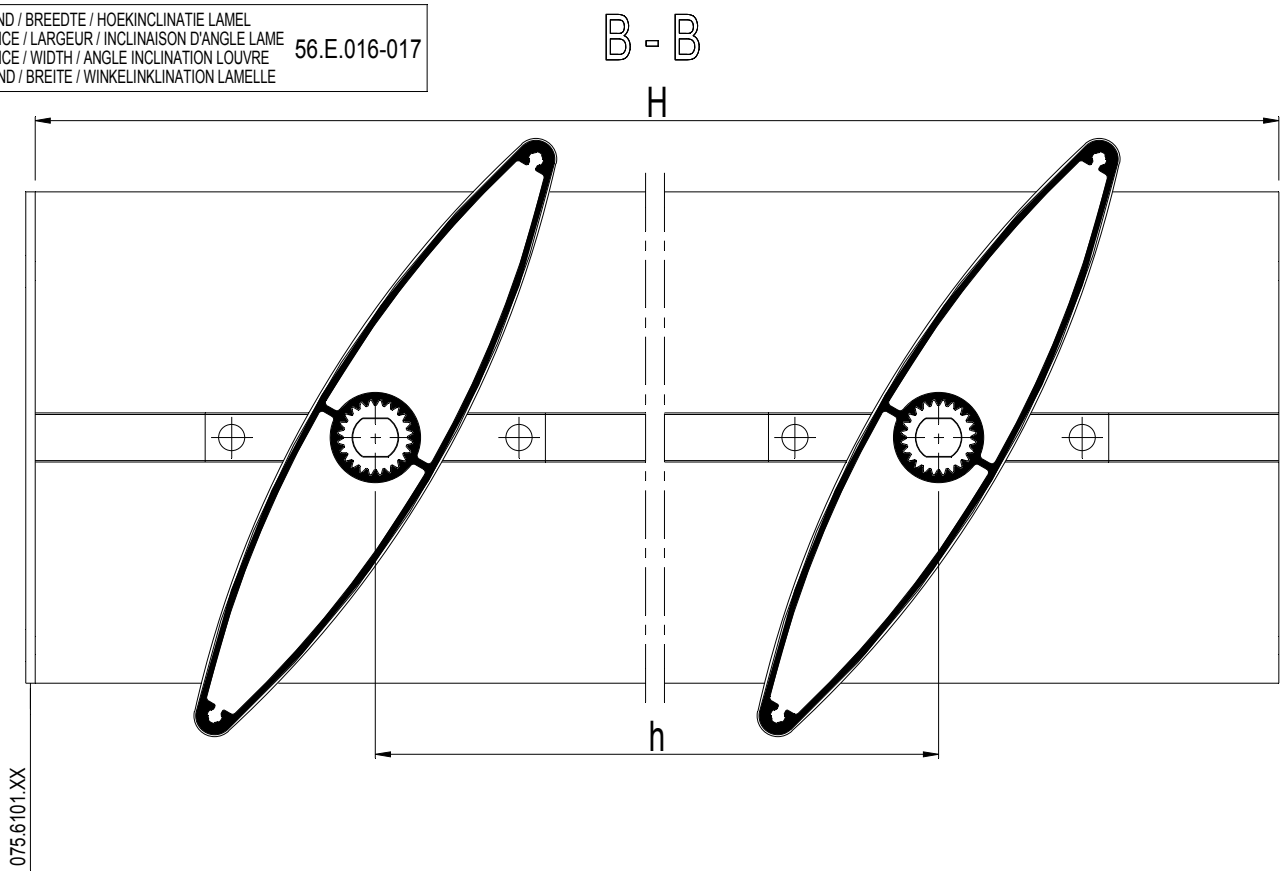

			#	Lm	☞
038.0120.XX			2	H - 2.5	56.C...
			(n - 1) x 2	h - 90	
			4	H - 92.5 - h .(n - 1) / 2	
038.0101.XX			2	H - 2.5	56.C...
038.1002.XX			n	B - 111	56.C...

n = AANTAL LAMELLEN
n = NOMBRE DE LAMES
n = NUMBER OF LOUVRES
n = ANZAHL LAMELLEN

* PER LAMEL
* PAR LAME
* PER LOUVRE
* PER LAMELLE

		#	☞
075.6101.XX		2	56.G...
052.5311.--		4	56.G...
075.6022.XX		2 *	56.G...
052.5311.--		4 *	56.G...
075.6088.--		2 *	56.G...

E

D0061189

BS 100

VASTE LAMELLEN IN HORIZONTAAL VLAK
LAMES FIXES DANS UN PLAN HORIZONTAL
FIXED LOUVRES IN A HORIZONTAL PLANE
FESTE LAMELLEN IN EINER HORIZONTALE EBENE

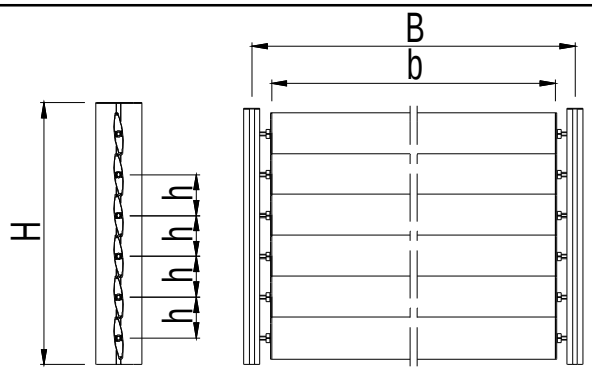

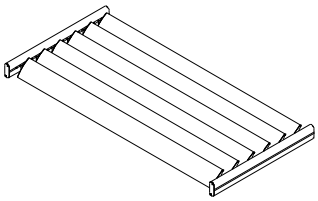

n = AANTAL LAMELLEN
n = NOMBRE DE LAMES
n = NUMBER OF LOUVRES
n = ANZAHL LAMELLEN

* PER LAMEL
* PER LAME
* PER LOUVRE
* PER LAMELLE

		#	Lm	
038.0120.XX		2	H - 2.5	56.C...
		(n - 1) x 2	h - 90	
		4	H - 92.5 - h .(n - 1) / 2	
038.0100.XX		2	H - 2.5	56.C...
038.1000.XX		n	B - 111	56.C...

		#	
075.6100.XX		2	56.G...
052.5311.--		4	56.G...
075.6020.XX		2*	56.G...
052.5311.--		4*	56.G...
075.6088.--		2*	56.G...

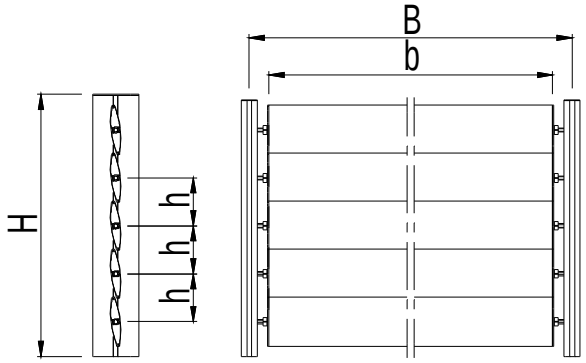

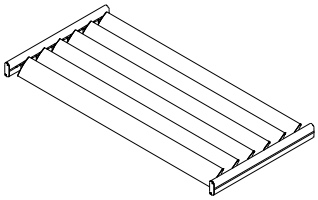

n = AANTAL LAMELLEN
n = NOMBRE DE LAMES
n = NUMBER OF LOUVRES
n = ANZAHL LAMELLEN

* PER LAMEL
* PER LAME
* PER LOUVRE
* PER LAMELLE

		#	Lm	
038.0120.XX		2	H - 2.5	56.C...
		(n - 1) x 2	h - 90	
		4	H - 92.5 - h .(n - 1) / 2	
038.0100.XX		2	H - 2.5	56.C...
038.1001.XX		n	B - 111	56.C...

		#	
075.6100.XX		4	56.G...
052.5311.--		8	56.G...
075.6021.XX		2*	56.G...
052.5311.--		4*	56.G...
075.6088.--		2*	56.G...

D0062542

E

BS 100

VASTE LAMELLEN IN HORIZONTAAL VLAK
LAMES FIXES DANS UN PLAN HORIZONTAL
FIXED LOUVRES IN A HORIZONTAL PLANE
FESTE LAMELLEN IN EINER HORIZONTALE EBENE

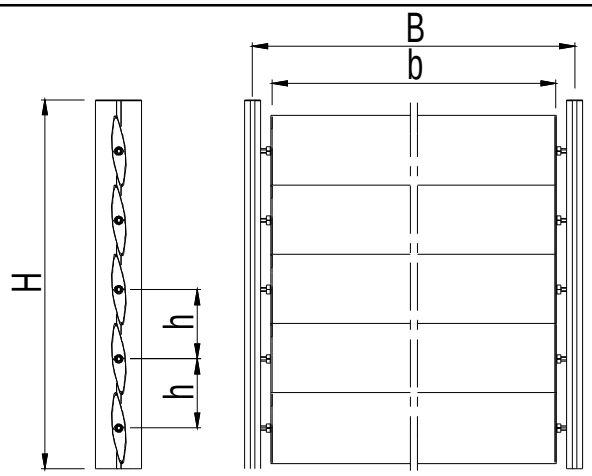

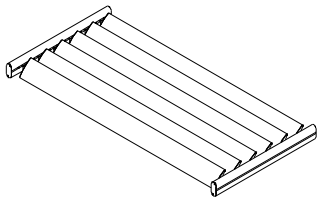

n = AANTAL LAMELLEN
n = NOMBRE DE LAMES
n = NUMBER OF LOUVRES
n = ANZAHL LAMELLEN

* PER LAMEL
* PAR LAME
* PER LOUVRE
* PER LAMELLE

		#	Lm	
038.0120.XX		2	H - 5	56.C...
		(n - 1) x 2	h - 90	
		4	H - 92.5 - h .(n - 1) / 2	
038.0100.XX		2	H - 5	56.C...
038.1003.XX		n	B - 111	56.C...

		#	
075.6100.XX		4	56.G...
052.5311.--		8	56.G...
075.6023.XX		2*	56.G...
052.5311.--		4*	56.G...
075.6088.--		2*	56.G...

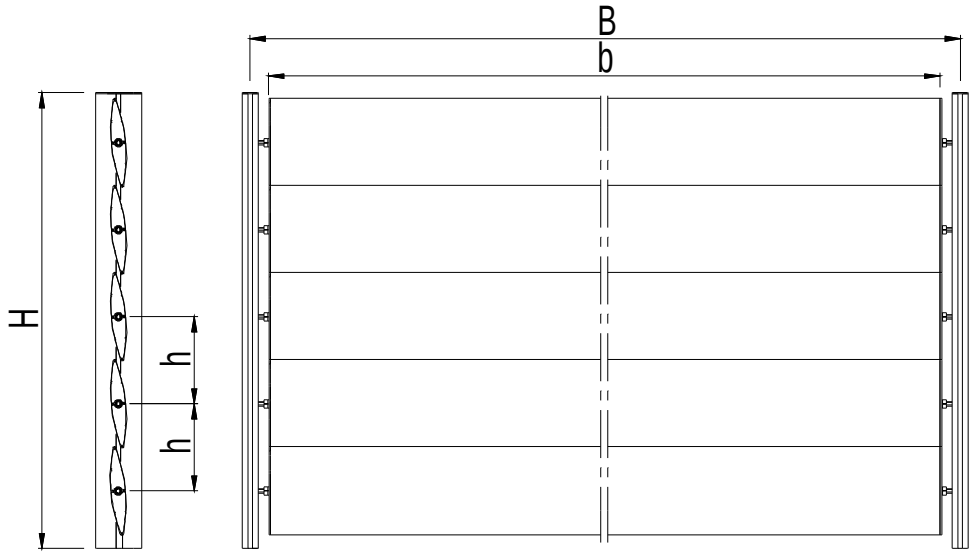

n = AANTAL LAMELLEN
n = NOMBRE DE LAMES
n = NUMBER OF LOUVRES
n = ANZAHL LAMELLEN

* PER LAMEL
* PAR LAME
* PER LOUVRE
* PER LAMELLE

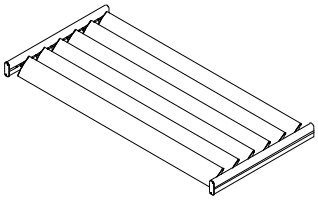

		#	Lm	
038.0120.XX		2	H - 5	56.C...
		(n - 1) x 2	h - 90	
		4	H - 92.5 - h .(n - 1) / 2	
038.0100.XX		2	H - 5	56.C...
038.1004.XX		n	B - 115	56.C...

		#	
075.6100.XX		4	56.G...
052.5311.--		8	56.G...
075.6024.XX		2*	56.G...
052.5311.--		8 *	56.G...
075.6088.--		2*	56.G...

E

D0062542

BS 100

VASTE LAMELLEN IN HORIZONTAAL VLAK
LAMES FIXES DANS UN PLAN HORIZONTAL
FIXED LOUVRES IN A HORIZONTAL PLANE
FESTE LAMELLEN IN EINER HORIZONTALE EBENE

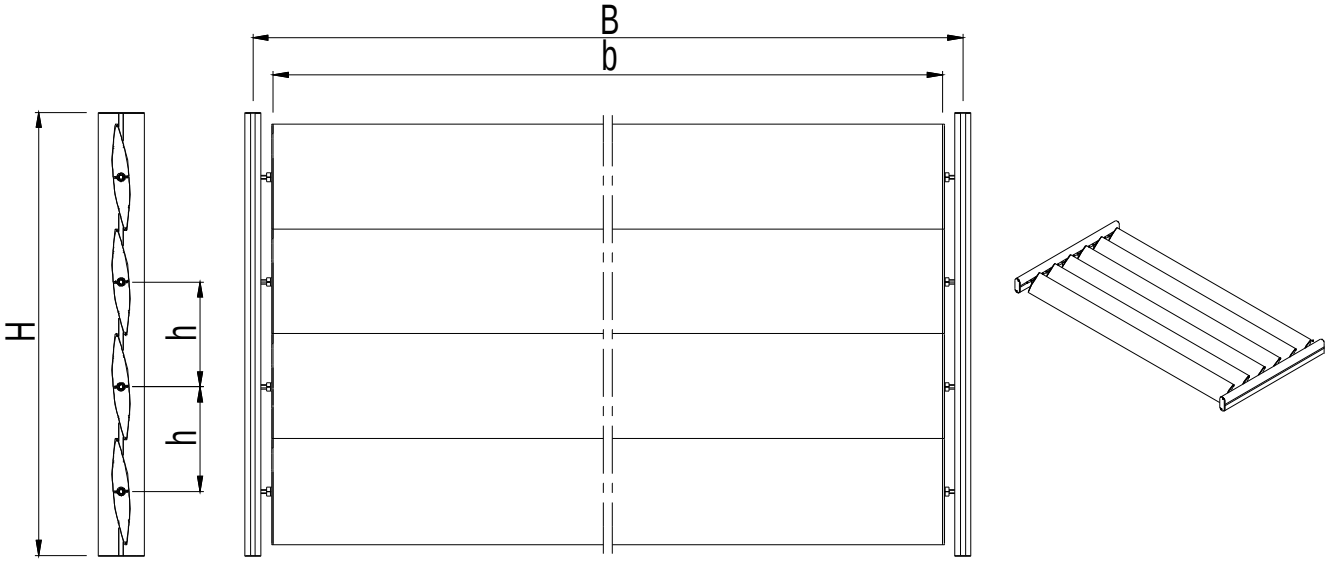

n = AANTAL LAMELLEN
n = NOMBRE DE LAMES
n = NUMBER OF LOUVRES
n = ANZAHL LAMELLEN

* PER LAMEL
* PAR LAME
* PER LOUVRE
* PER LAMELLE

			#	Lm	
038.0120.XX			2	H - 5	56.C...
			(n - 1) x 2	h - 90	
			4	H - 92.5 - h .(n - 1) / 2	
038.0100.XX			2	H - 5	56.C...
038.1005.XX			n	B - 115	56.C...

		#	
075.6100.XX		4	56.G...
052.5311.--		8	56.G...
075.6025.XX		2*	56.G...
052.5311.--		8 *	56.G...
075.6088.--		2*	56.G...

E

D0062543

BS 100

VASTE LAMELLEN IN HORIZONTAAL VLAK
LAMES FIXES DANS UN PLAN HORIZONTAL
FIXED LOUVRES IN A HORIZONTAL PLANE
FESTE LAMELLEN IN EINER HORIZONTALE EBENE

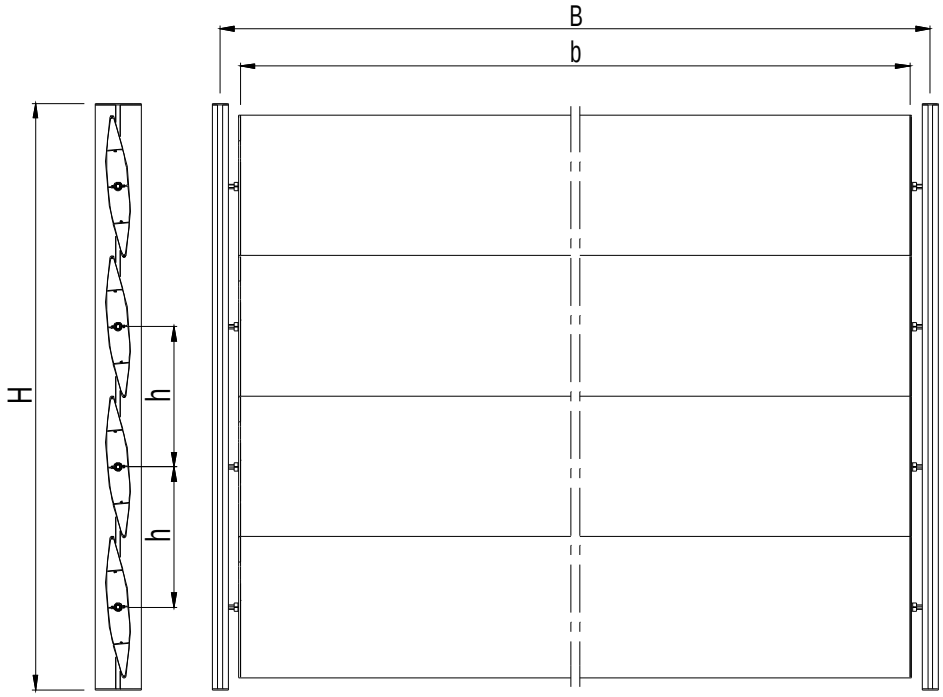

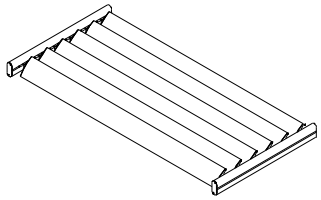

n = AANTAL LAMELLEN
n = NOMBRE DE LAMES
n = NUMBER OF LOUVRES
n = ANZAHL LAMELLEN

* PER LAMEL
* PAR LAME
* PER LOUVRE
* PER LAMELLE

			#	Lm	
038.0120.XX			2	H - 5	56.C...
			(n - 1) x 2	h - 90	
			4	H - 92.5 - h .(n - 1) / 2	
038.0100.XX			2	H - 5	56.C...
038.1006.XX			2	B - 115	56.C...

		#	
075.6100.XX		4	56.G...
052.5311.--		8	56.G...
075.6026.XX		2*	56.G...
052.5311.--		12 *	56.G...
075.6088.--		2*	56.G...

E

D0062543

AFSTAND / BREEDTE / HOEKINCLINATIE LAMEL
DISTANCE / LARGEUR / INCLINAISON D'ANGLE LAME
DISTANCE / WIDTH / ANGLE INCLINATION LOUVRE
ABSTAND / BREITE / WINKELINKLINATION LAMELLE

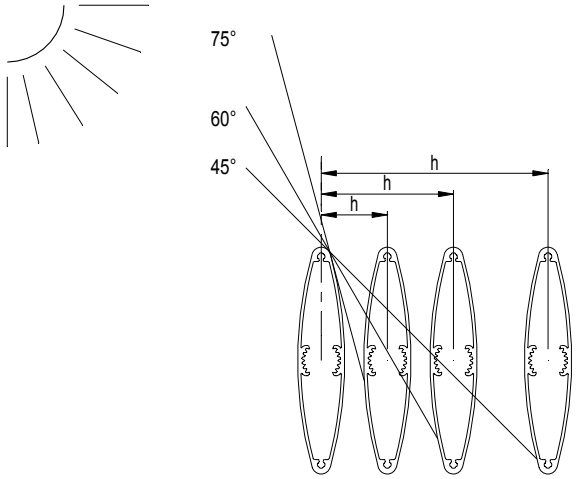

LAMELLENHELLING
PENTE DES LAMES
LAMELLA SLOPE
LAMELLENNEIGUNG
0°

	Lw	h		
PR. NR.		45°	60°	75°
038.1000.XX	120 mm	120	70	35
038.1001.XX	140 mm	140	85	40
038.1002.XX	180 mm	180	105	50
038.1003.XX	200 mm	200	115	55
038.1004.XX	250 mm	250	145	70
038.1005.XX	300 mm	300	175	85
038.1006.XX	400 mm	400	230	110

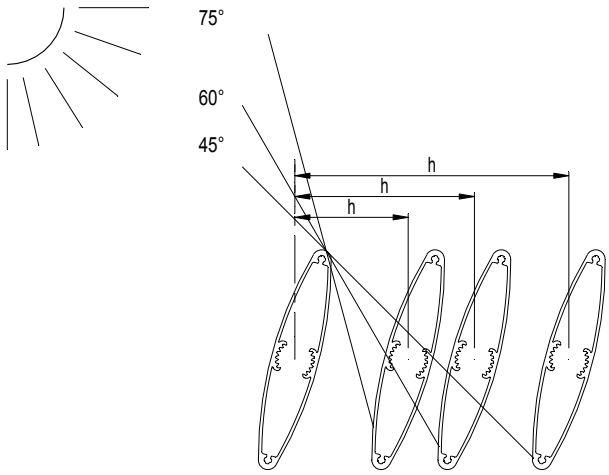

LAMELLENHELLING
PENTE DES LAMES
LAMELLA SLOPE
LAMELLENNEIGUNG
15°

	Lw	h		
PR. NR.		45°	60°	75°
038.1000.XX	120 mm	145	95	60
038.1001.XX	140 mm	170	115	70
038.1002.XX	180 mm	215	145	90
038.1003.XX	200 mm	245	160	105
038.1004.XX	250 mm	305	200	130
038.1005.XX	300 mm	365	240	155
038.1006.XX	400 mm	485	325	205

Lw — LAMELLENBREEDTE / LARGEUR DES LAMES / LAMELLA WIDTH / LAMELLENBREITE

h — LAMELLENAFSTAND / DISTANCE DES LAMES / LAMELLA DISTANCE / LAMELLENABSTAND

D0061194

E

AFSTAND / BREEDTE / HOEKINCLINATIE LAMEL
DISTANCE / LARGEUR / INCLINAISON D'ANGLE LAME
DISTANCE / WIDTH / ANGLE INCLINATION LOUVRE
ABSTAND / BREITE / WINKELINKLINATION LAMELLE

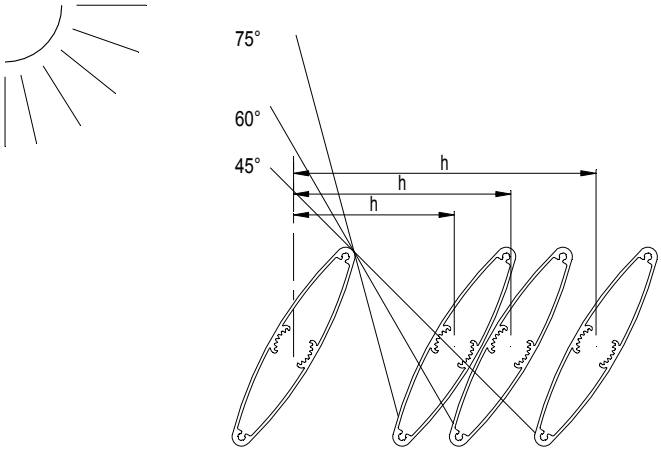

LAMELLENHELLING
PENTE DES LAMES
LAMELLA SLOPE
LAMELLENNEIGUNG
30°

	Lw	h		
PR. NR.		45°	60°	75°
038.1000.XX	120 mm	160	115	85
038.1001.XX	140 mm	185	135	100
038.1002.XX	180 mm	240	175	130
038.1003.XX	200 mm	270	195	145
038.1004.XX	250 mm	335	245	180
038.1005.XX	300 mm	405	295	220
038.1006.XX	400 mm	540	395	290

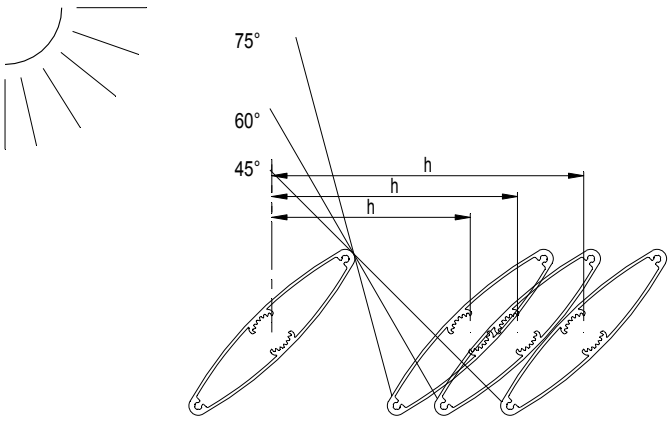

LAMELLENHELLING
PENTE DAS LAMES
LAMELLA SLOPE
LAMELLENNEIGUNG
45°

	Lw	h		
PR. NR.		45°	60°	75°
038.1000.XX	120 mm	165	130	105
038.1001.XX	140 mm	195	155	125
038.1002.XX	180 mm	250	195	160
038.1003.XX	200 mm	280	220	175
038.1004.XX	250 mm	350	275	220
038.1005.XX	300 mm	420	330	265
038.1006.XX	400 mm	560	440	355

D0061194

DETAIL MOTORAANSTURING
DETAIL COMMANDE MOTEUR
DETAIL MOTOR DRIVE
DETAIL MOTORSTEUERUNG

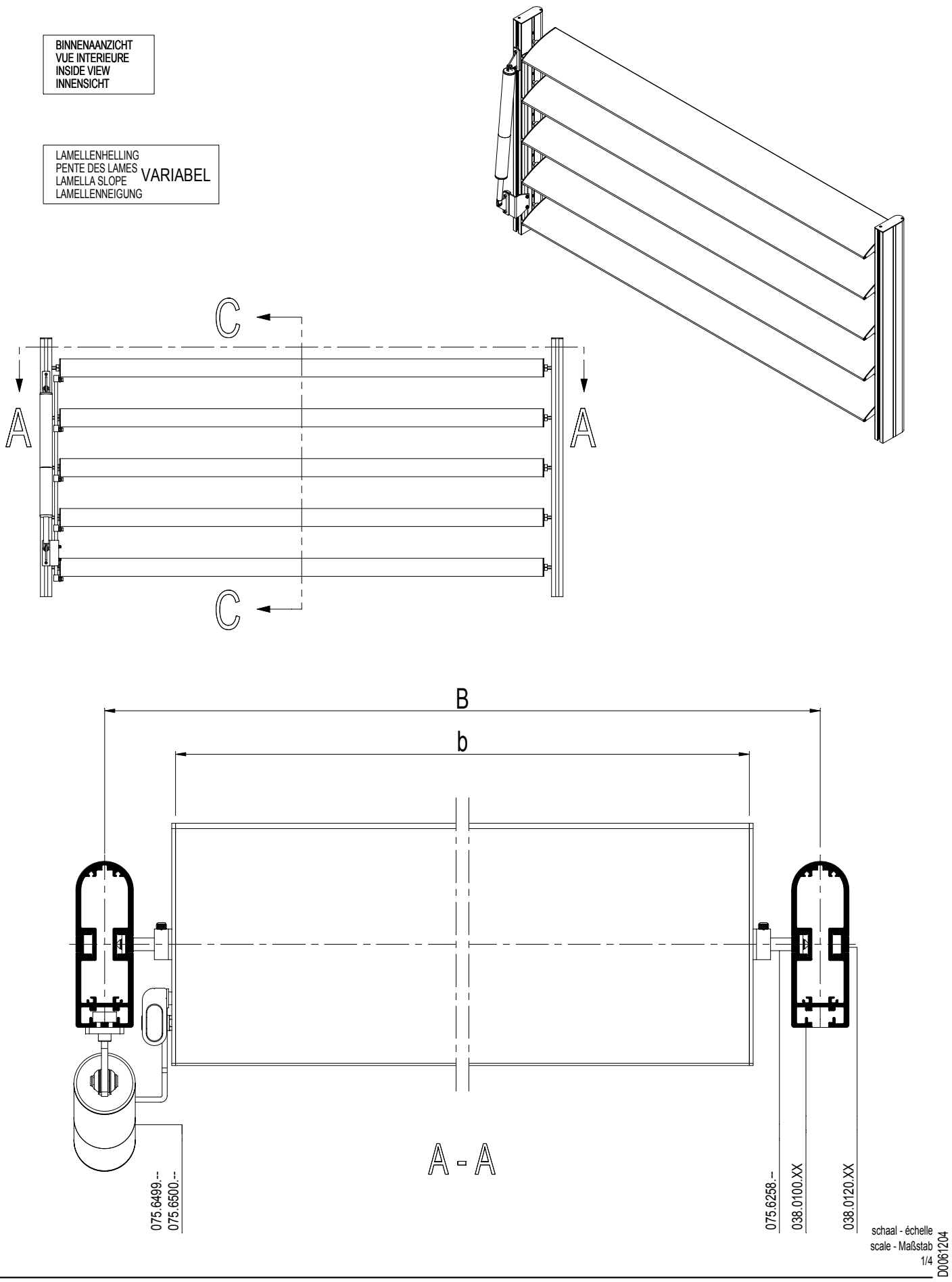

DETAIL MOTORAANSTURING
DETAIL COMMANDE MOTEUR
DETAIL MOTOR DRIVE
DETAIL MOTORSTEUERUNG

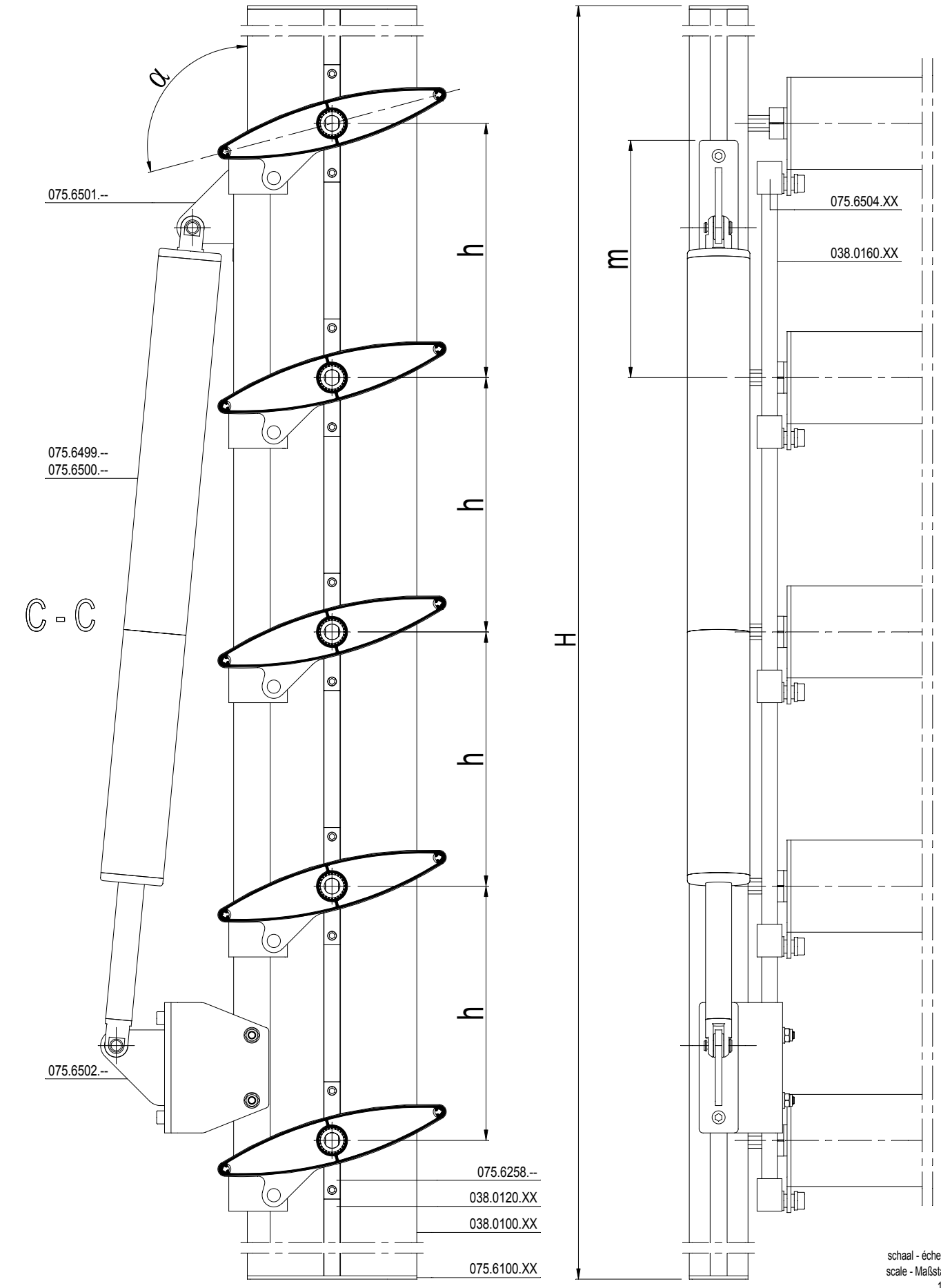

D0061204

E

OVERZICHT LAMELLEN BEWEEGBAAR
APERCU LAMES MOBILES
OVERVIEW MOVEABLE LOUVRES
UEBERSICHT BEWEGLICHE LAMELLEN

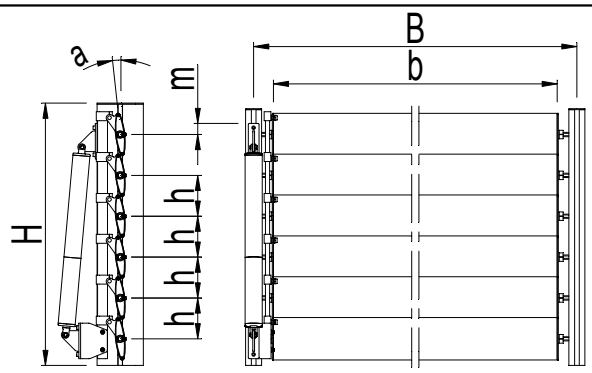

a: min. 6° (*)
a: max. 140°

h: 115 mm
m: 31 mm

n = AANTAL LAMELLEN
n = NOMBRE DE LAMES
n = NUMBER OF LOUVRES
n = ANZAHL LAMELLEN

(*) : BIJ MINIMUM SLAG VAN MOTOR
(*) : A COURSE MINIMAL DU MOTEUR
(*) : AT MINIMUM STROKE OF MOTOR
(*) : AM MINIMUM SCHLAG MOTOR

		#	Lm	
038.0120.XX		2	H - 5	56.C...
		(n - 1) x 2	h - 90	
		4	H - 95 - h .(n - 1) / 2	
038.0100.XX		2	H - 5	56.C...
038.1000.XX		n	B - 111	56.C...
038.0160.XX		1	(n - 1) * h + 25	56.C...

		#	
075.6100.XX		4	56.G...
052.5311.--		8	56.G...
075.6020.XX		n	56.G...
052.5311.--		2 * n	56.G...
075.6070.XX		n	56.G...
052.5311.--		2 * n	56.G...
075.6258.--		2 * n	56.G...
075.6504.XX		n	56.G...
075.6501.--		2	56.G...
075.6502.--		1	56.G...
075.6499.--		1	56.G...

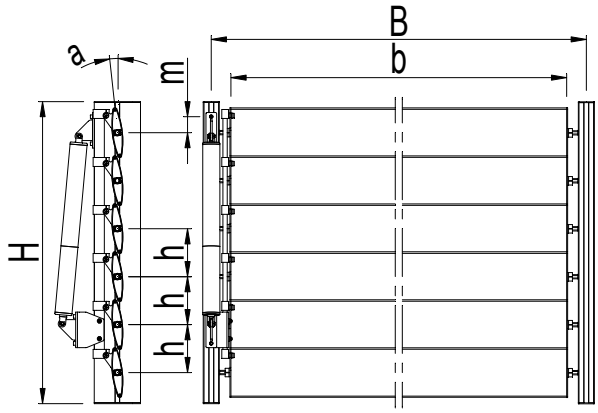

a: min. 6° (*)
a: max. 130°

h: 135 mm
m: 57 mm

n = AANTAL LAMELLEN
n = NOMBRE DE LAMES
n = NUMBER OF LOUVRES
n = ANZAHL LAMELLEN

(*) : BIJ MINIMUM SLAG VAN MOTOR
(*) : A COURSE MINIMAL DU MOTEUR
(*) : AT MINIMUM STROKE OF MOTOR
(*) : AM MINIMUM SCHLAG MOTOR

		#	Lm	
038.0120.XX		2	H - 5	56.C...
		(n - 1) x 2	h - 90	
		4	H - 95 - h .(n - 1) / 2	
038.0100.XX		2	H - 5	56.C...
038.1001.XX		n	B - 111	56.C...
038.0160.XX		1	(n - 1) * h + 25	56.C...

		#	
075.6100.XX		4	56.G...
052.5311.--		8	56.G...
075.6021.XX		n	56.G...
052.5311.--		2 * n	56.G...
075.6071.XX		n	56.G...
052.5311.--		2 * n	56.G...
075.6258.--		2 * n	56.G...
075.6504.XX		n	56.G...
075.6501.--		2	56.G...
075.6502.--		1	56.G...
075.6499.--		1	56.G...

E

D0061206

BS 100

OVERZICHT LAMELLEN BEWEEGBAAR
APERCU LAMES MOBILES
OVERVIEW MOVEABLE LOUVRES
UEBERSICHT BEWEGLICHE LAMELLEN

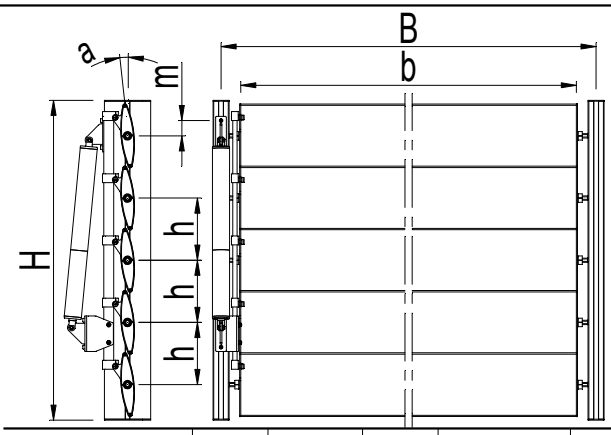

a: min. 5° (*)
a: max. 115°

h: 175 mm
m: 55 mm

n = AANTAL LAMELLEN
n = NOMBRE DE LAMES
n = NUMBER OF LOUVRES
n = ANZAHL LAMELLEN

(*) : BIJ MINIMUM SLAG VAN MOTOR
(*) : A COURSE MINIMAL DU MOTEUR
(*) : AT MINIMUM STROKE OF MOTOR
(*) : AM MINIMUM SCHLAG MOTOR

		#	Lm	
038.0120.XX		2	H - 5	56.C...
		(n - 1) x 2	h - 90	
		4	H - 95 - h .(n - 1) / 2	
038.0100.XX		2	H - 5	56.C...
038.1002.XX		n	B - 111	56.C...
038.0160.XX		1	(n - 1) * h + 25	56.C...

		#	
075.6100.XX		4	56.G....
052.5311.--		8	56.G...
075.6022.XX		n	56.G...
052.5311.--		2 * n	56.G...
075.6072.XX		n	56.G...
052.5311.--		2 * n	56.G...
075.6258.--		2 * n	56.G...
075.6504.XX		n	56.G...
075.6501.--		2	56.G...
075.6502.--		1	56.G...
075.6499.--		1	56.G...

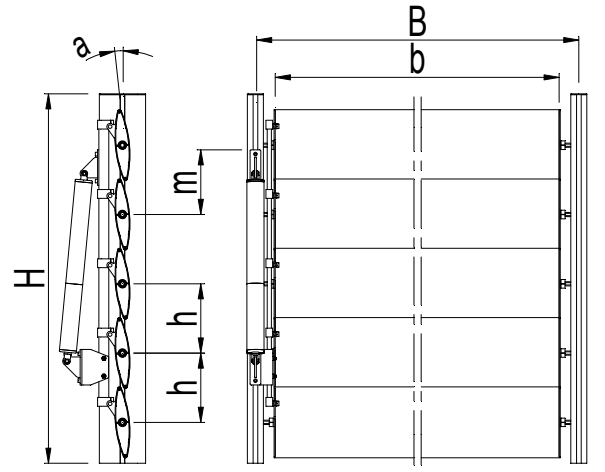

a: min. 3° (*)
a: max. 110°

h: 195 mm
m: 182 mm

n = AANTAL LAMELLEN
n = NOMBRE DE LAMES
n = NUMBER OF LOUVRES
n = ANZAHL LAMELLEN

(*) : BIJ MINIMUM SLAG VAN MOTOR
(*) : A COURSE MINIMAL DU MOTEUR
(*) : AT MINIMUM STROKE OF MOTOR
(*) : AM MINIMUM SCHLAG MOTOR

		#	Lm	
038.0120.XX		2	H - 5	56.C...
		(n - 1) x 2	h - 90	
		4	H - 95 - h .(n - 1) / 2	
038.0100.XX		2	H - 5	56.C...
038.1003.XX		n	B - 111	56.C...
038.0160.XX		1	(n - 1) * h + 25	56.C...

		#	
075.6100.XX		4	56.G...
052.5311.--		8	56.G...
075.6023.XX		n	56.G...
052.5311.--		2 * n	56.G...
075.6073.XX		n	56.G...
052.5311.--		2 * n	56.G...
075.6258.--		2 * n	56.G...
075.6504.XX		n	56.G...
075.6501.--		2	56.G...
075.6502.--		1	56.G...
075.6499.--		1	56.G...

E

D0061206

OVERZICHT LAMELLEN BEWEEGBAAR
APERCU LAMES MOBILES
OVERVIEW MOVEABLE LOUVRES
UEBERSICHT BEWEGLICHE LAMELLEN

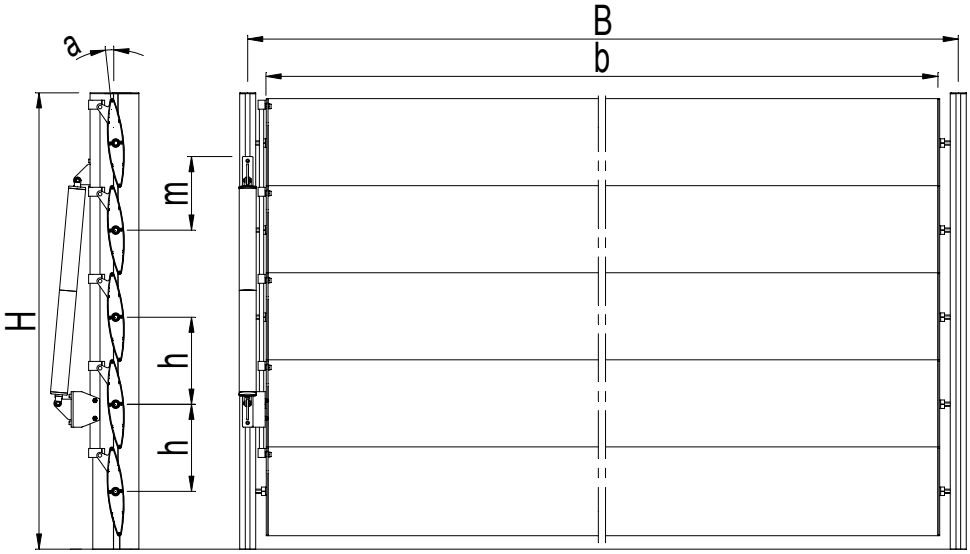

a: min. 2° (*)
a: max. 132°

n = AANTAL LAMELLEN
n = NOMBRE DE LAMES
n = NUMBER OF LOUVRES
n = ANZAHL LAMELLEN

h: 245 mm
m: 207 mm

(*) : BIJ MINIMUM SLAG VAN MOTOR
(*) : A COURSE MINIMAL DU MOTEUR
(*) : AT MINIMUM STROKE OF MOTOR
(*) : AM MINIMUM SCHLAG MOTOR

		#	Lm	
038.0120.XX		2	H - 5	56.C...
		(n - 1) x 2	h - 90	
		4	H - 95 - h .(n - 1) / 2	
038.0100.XX		2	H - 5	56.C...
038.1004.XX		n	B - 115	56.C...
038.0160.XX		1	(n - 1) * h + 25	56.C...

		#	
075.6100.XX		4	56.G...
052.5311.--		8	56.G...
075.6024.XX		n	56.G...
052.5311.--		4 * n	56.G...
075.6074.XX		n	56.G...
052.5311.--		4 * n	56.G...
075.6258.--		2 * n	56.G...
075.6504.XX		n	56.G...
075.6501.--		2	56.G...
075.6502.--		1	56.G...
075.6500.--		1	56.G...

E

D0061221

OVERZICHT LAMELLEN BEWEEGBAAR
APERCU LAMES MOBILES
OVERVIEW MOVEABLE LOUVRES
UEBERSICHT BEWEGLICHE LAMELLEN

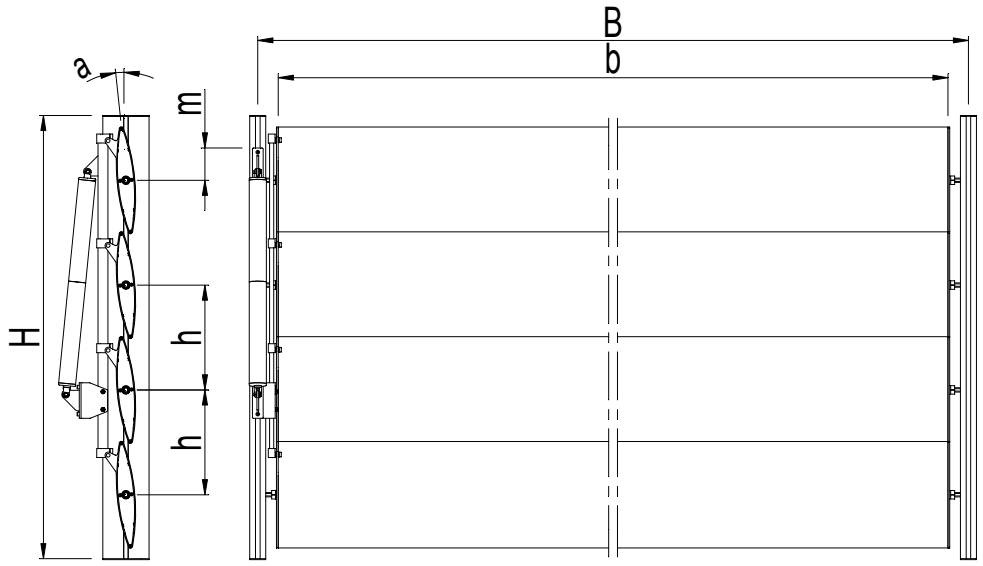

a: min. 3° (*)
a: max. 115°

h: 295 mm
m: 91 mm

n = AANTAL LAMELLEN
n = NOMBRE DE LAMES
n = NUMBER OF LOUVRES
n = ANZAHL LAMELLEN

(*) : BIJ MINIMUM SLAG VAN MOTOR
(*) : A COURSE MINIMAL DU MOTEUR
(*) : AT MINIMUM STROKE OF MOTOR
(*) : AM MINIMUM SCHLAG MOTOR

			#	Lm	
038.0120.XX			2	H - 5	56.C...
			(n - 1) x 2	h - 90	
			4	H - 95 - h .(n - 1) / 2	
038.0100.XX			2	H - 5	56.C...
038.1005.XX			n	B - 115	56.C...
038.0160.XX			1	(n - 1) * h + 25	56.C...

		#	
075.6100.XX		4	56.G...
052.5311.--		8	56.G...
075.6025.XX		n	56.G...
052.5311.--		4 * n	56.G...
075.6075.XX		n	56.G...
052.5311.--		4 * n	56.G...
075.6258.--		2 * n	56.G...
075.6504.XX		n	56.G...
075.6501.--		2	56.G...
075.6502.--		1	56.G...
075.6500.--		1	56.G...

E

D0061221

OVERZICHT LAMELLEN BEWEEGBAAR
APERCU LAMES MOBILES
OVERVIEW MOVEABLE LOUVRES
UEBERSICHT BEWEGLICHE LAMELLEN

D0061228

OVERZICHT LAMELLEN BEWEEGBAAR
APERCU LAMES MOBILES
OVERVIEW MOVEABLE LOUVRES
UEBERSICHT BEWEGLICHE LAMELLEN

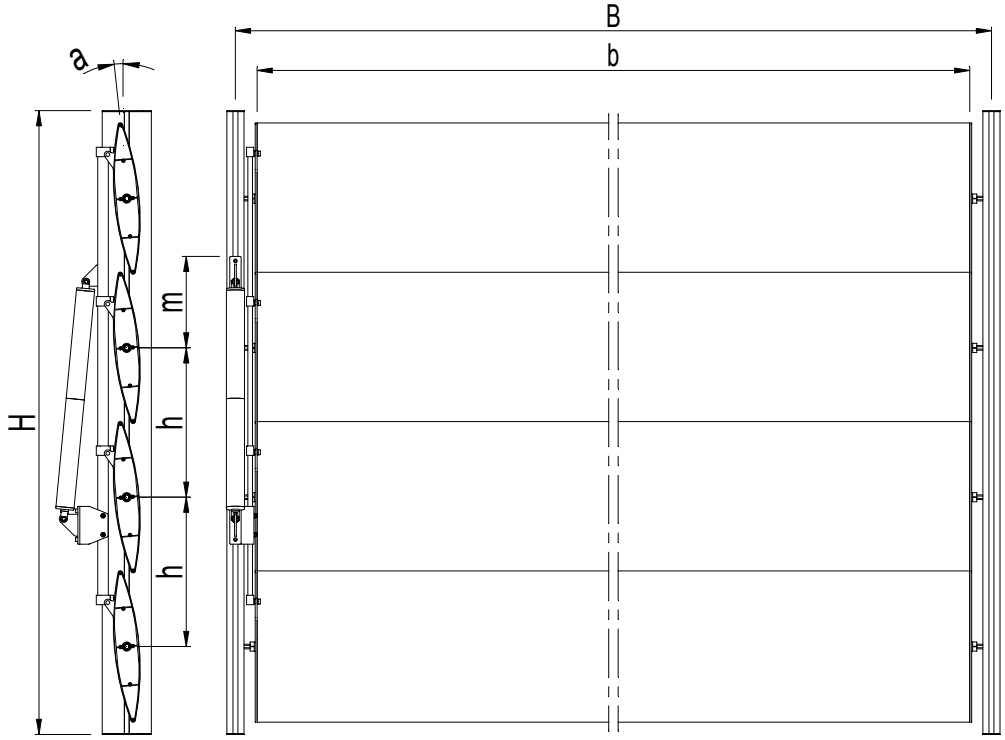

a: min. 2° (*)
a: max. 108°

h: 395 mm
m: 242 mm

n = AANTAL LAMELLEN
n = NOMBRE DE LAMES
n = NUMBER OF LOUVRES
n = ANZAHL LAMELLEN

(*) : BIJ MINIMUM SLAG VAN MOTOR
(*) : A COURSE MINIMAL DU MOTEUR
(*) : AT MINIMUM STROKE OF MOTOR
(*) : AM MINIMUM SCHLAG MOTOR

		#	Lm	
038.0120.XX		2	H - 5	56.C...
		(n - 1) x 2	h - 90	
		4	$\frac{H - 95 - h .(n - 1)}{2}$	
038.0100.XX		2	H - 5	56.C...
038.1006.XX		2	B - 115	56.C...
038.0160.XX		1	(n - 1) * h + 25	56.C...

		#	
075.6100.XX		4	56.G...
052.5311.--		8	56.G...
075.6026.XX		n	56.G...
052.5311.--		6 * n	56.G...
075.6076.XX		n	56.G...
052.5311.--		6 * n	56.G...
075.6258.--		2 * n	56.G...
075.6504.XX		n	56.G...
075.6501.--		2	56.G...
075.6502.--		1	56.G...
075.6500.--		1	56.G...

E

D0061228

VASTE LAMELLEN IN HORIZONTAAL VLAK
LAMES FIXES DANS UN PLAN HORIZONTAL
FIXED LOUVRES IN A HORIZONTAL PLANE
FESTE LAMELLEN IN EINER HORIZONTALE EBENE

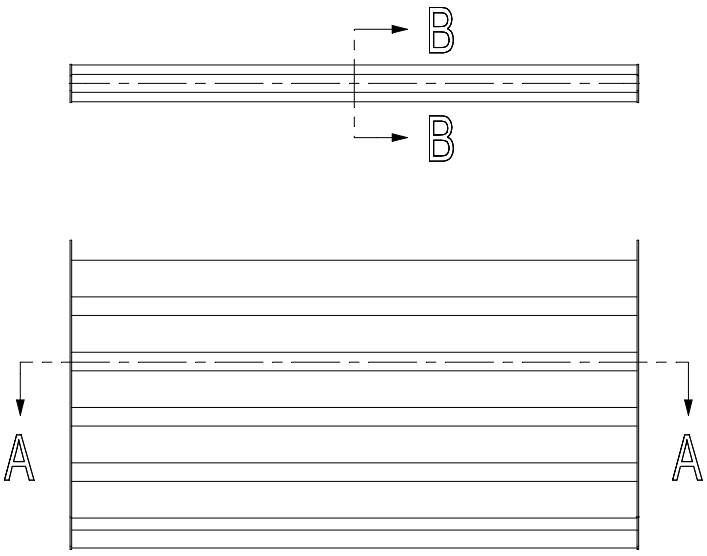

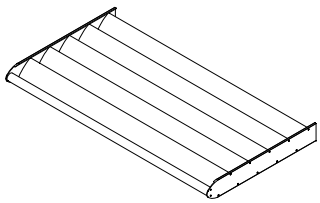

			#	Lm	
038.1002.XX			5	B - 9	56.C...
038.0130.XX			1	B - 9	56.C...

		#	
075.6142.XX		1	56.G...
052.5313.--		24	56.G...

B - B

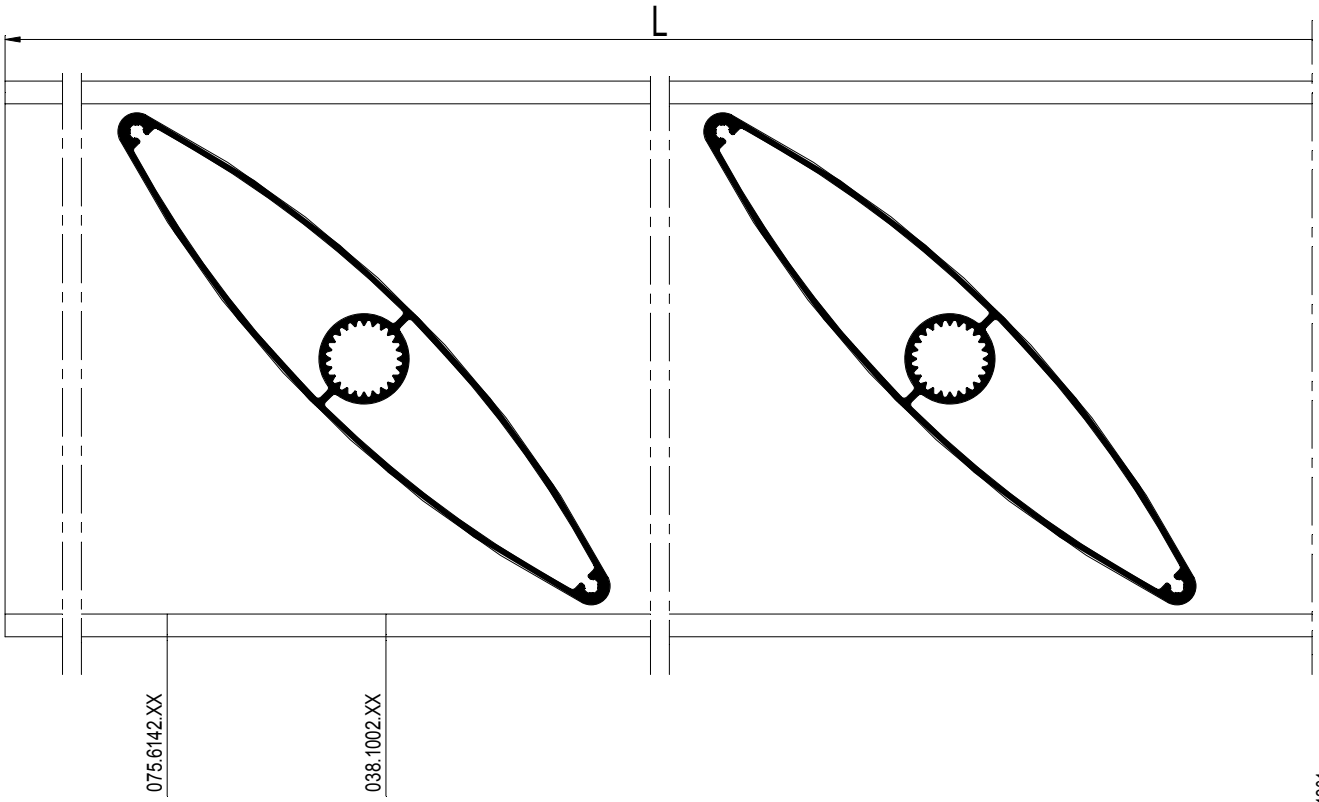

D0061201

E

BS 100

VASTE LAMELLEN IN HORIZONTAAL VLAK
LAMES FIXES DANS UN PLAN HORIZONTAL
FIXED LOUVRES IN A HORIZONTAL PLANE
FESTE LAMELLEN IN EINER HORIZONTALE EBENE

Lamellenhelling Pente des lames Lamella slope Lamellenneigung	45°

A - A

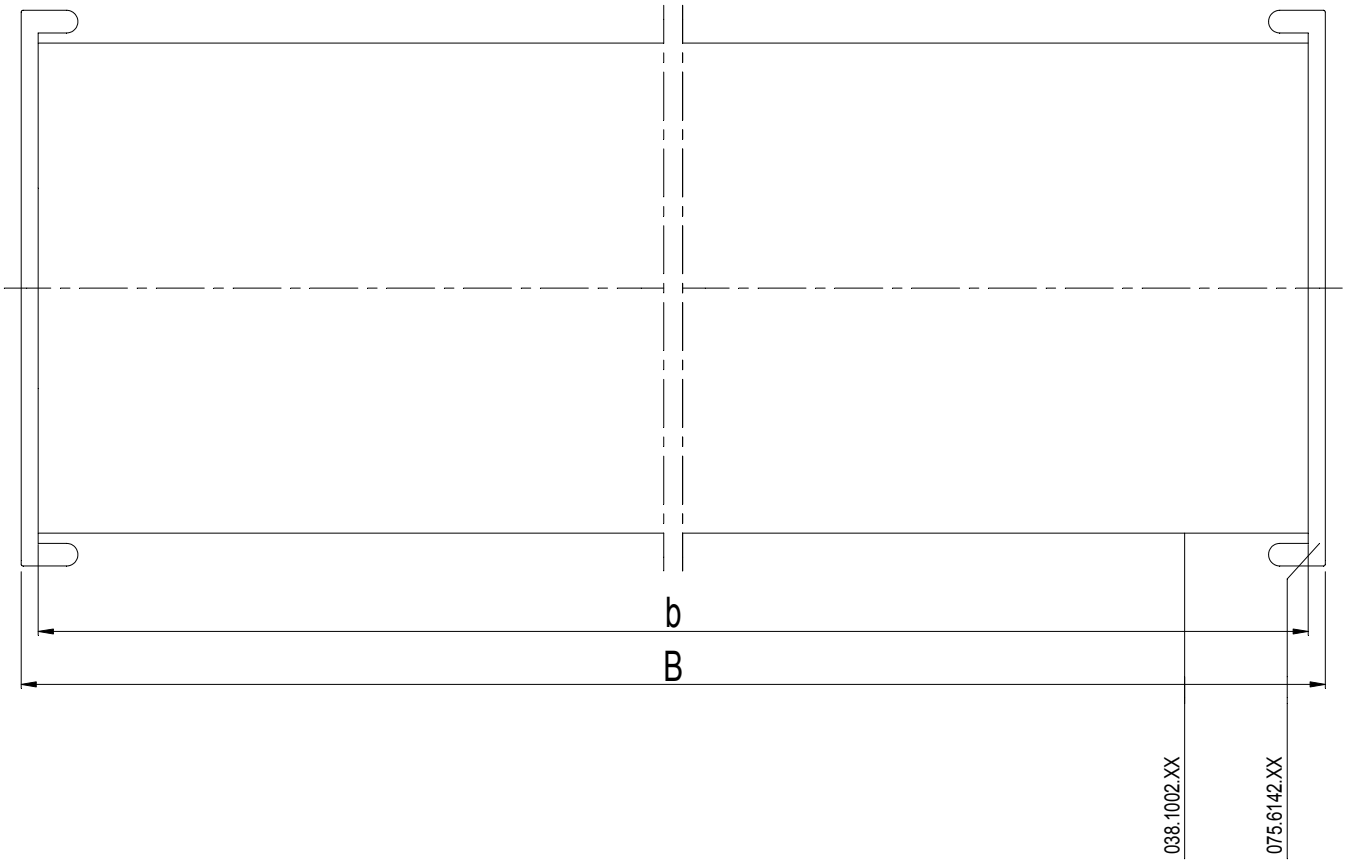

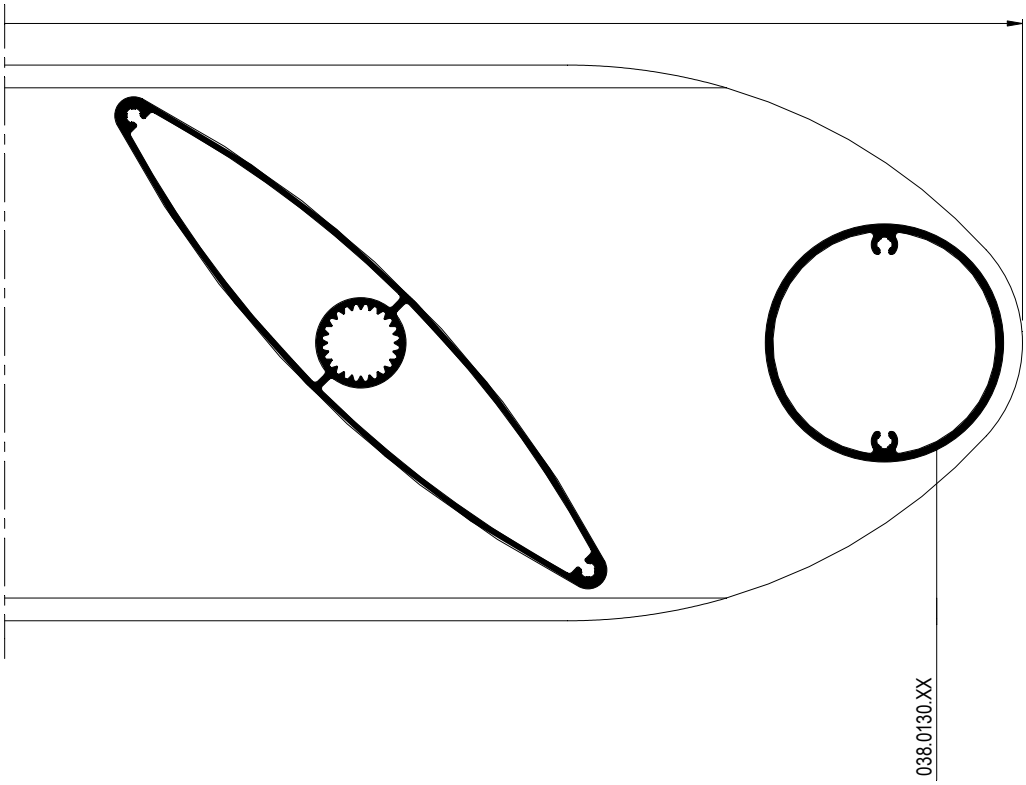

E

D0061201

OVERZICHT VASTE LAMELLEN
APERCU LAMES FIXES
OVERVIEW FIXED LOUVRES
UEBERSICHT FESTE LAMELLEN

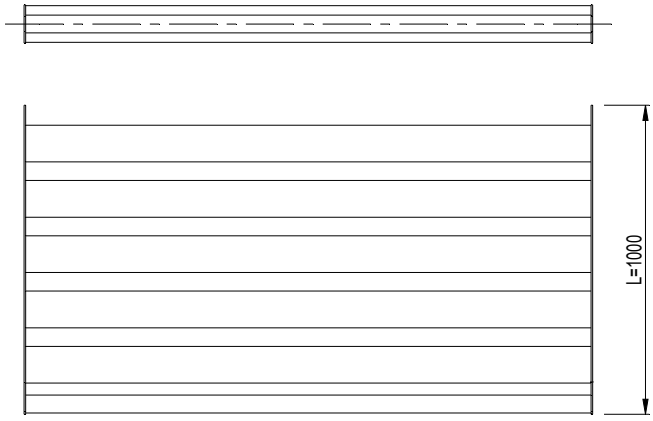

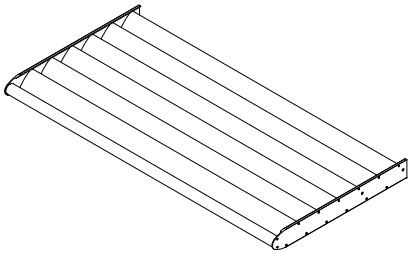

			#	Lm	
038.1001.XX			6	B - 9	56.C...
038.0130.XX			1	B - 9	56.C...

		#	
075.6140.XX		1	56.G...
052.5313.--		28	56.G...

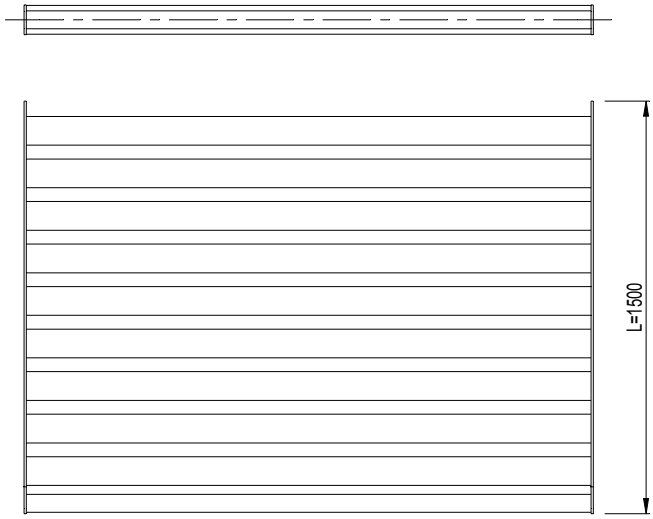

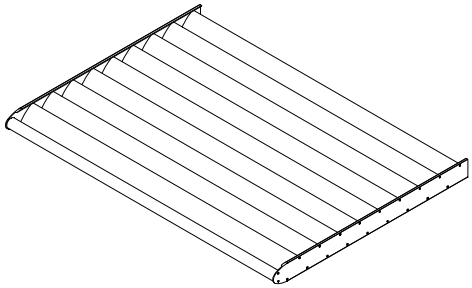

			#	Lm	
038.1001.XX			9	B - 9	56.C...
038.0130.XX			1	B - 9	56.C...

		#	
075.6141.XX		1	56.G...
052.5313.--		40	56.G...

D0061202

E

OVERZICHT VASTE LAMELLEN
APERCU LAMES FIXES
OVERVIEW FIXED LOUVRES
UEBERSICHT FESTE LAMELLEN

Lamellenhelling Pente des lames Lamella slope Lamellenneigung	45°

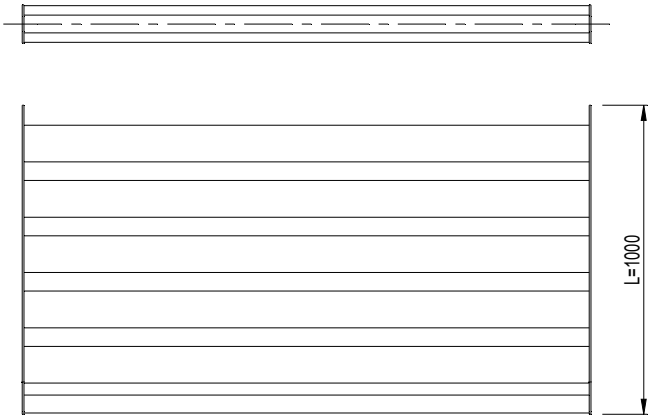

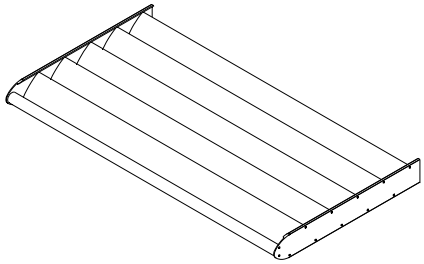

		#	Lm	
038.1002.XX		5	B - 9	56.C...
038.0130.XX		1	B - 9	56.C...

		#	
075.6142.XX		1	56.G...
052.5313.--		24	56.G...

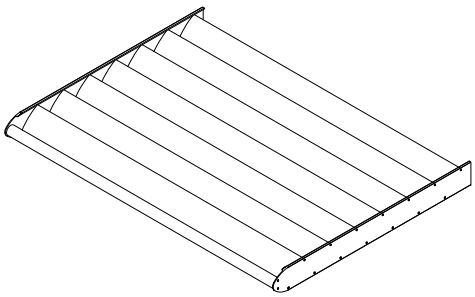

		#	Lm	
038.1002.XX		7	B - 9	56.C...
038.0130.XX		1	B - 9	56.C...

		#	
075.6143.XX		1	56.G...
052.5313.--		32	56.G...

E

D0061202

BEREKENING DRAADSTANG
CALCULATION BARRE FILETEE
CALCULATION THREADED ROD
BERECHNUNG GEWINDESTANGE

Opmerking :
Kracht moet steeds overgedragen worden op dragers.

Remarque :
La force doit toujours être transmise au chevron

General :
The force must always be transmitted on the rafter

Anmerkung :
Die Kraft soll immer auf die Dachsparren übertragen werden

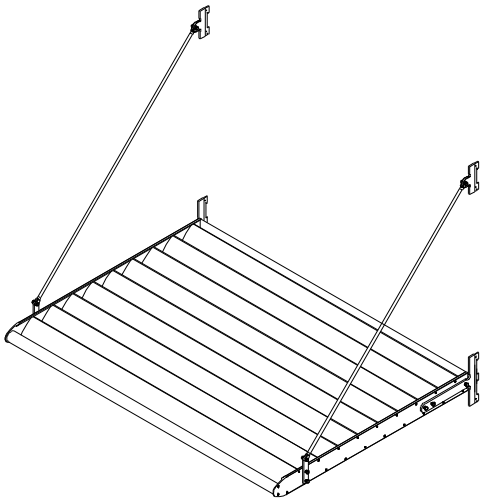

Algemene opmerking :

Elke typische situatie en specifiek project dient door een officiële stuctureel ingenieur berekend/bekrachtigd te worden.

General remark :

Every typical situation and specific project has to be calculated / validated by an official structural engineer.

Remarque générale :

Chaque situation typique et projet spécifique doit être calculé/validé par un ingénieur structurel officiel.

Allgemeine Anmerkung :

Jede typische Situation und spezifisches Projekt soll von einem offiziellen strukturellen Ingenieur berechnet bekräftigt werden.

$$[\,(H - 107.5\,) / \sin 45°\,] - (2 \times 26.5) = L1$$

$$L1 - (2 \times 12) = L2$$

$$B = \sin 45° \times (L1 + (2 \times 26.5))$$

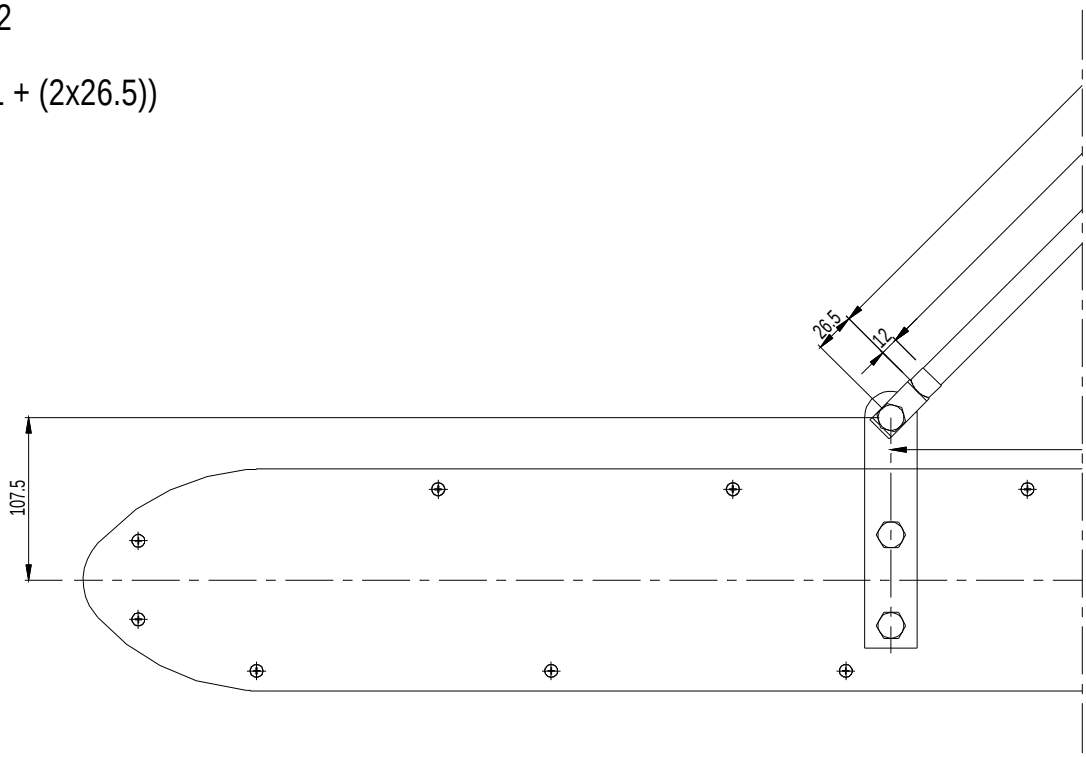

E

BEREKENING DRAADSTANG
CALCULATION BARRE FILETEE
CALCULATION THREADED ROD
BERECHNUNG GEWINDESTANGE

L1	DRAADSTANG 050.5215.-- BARRE FILETEE 050.5215.-- THREADED ROD 050.5215.-- GEWINDESTANGE 050.5215.--
L2	BUIS 0B0.1601.XX TUBE 0B0.1601.XX TUBE 0B0.1601.XX ROHR 0B0.1601.XX

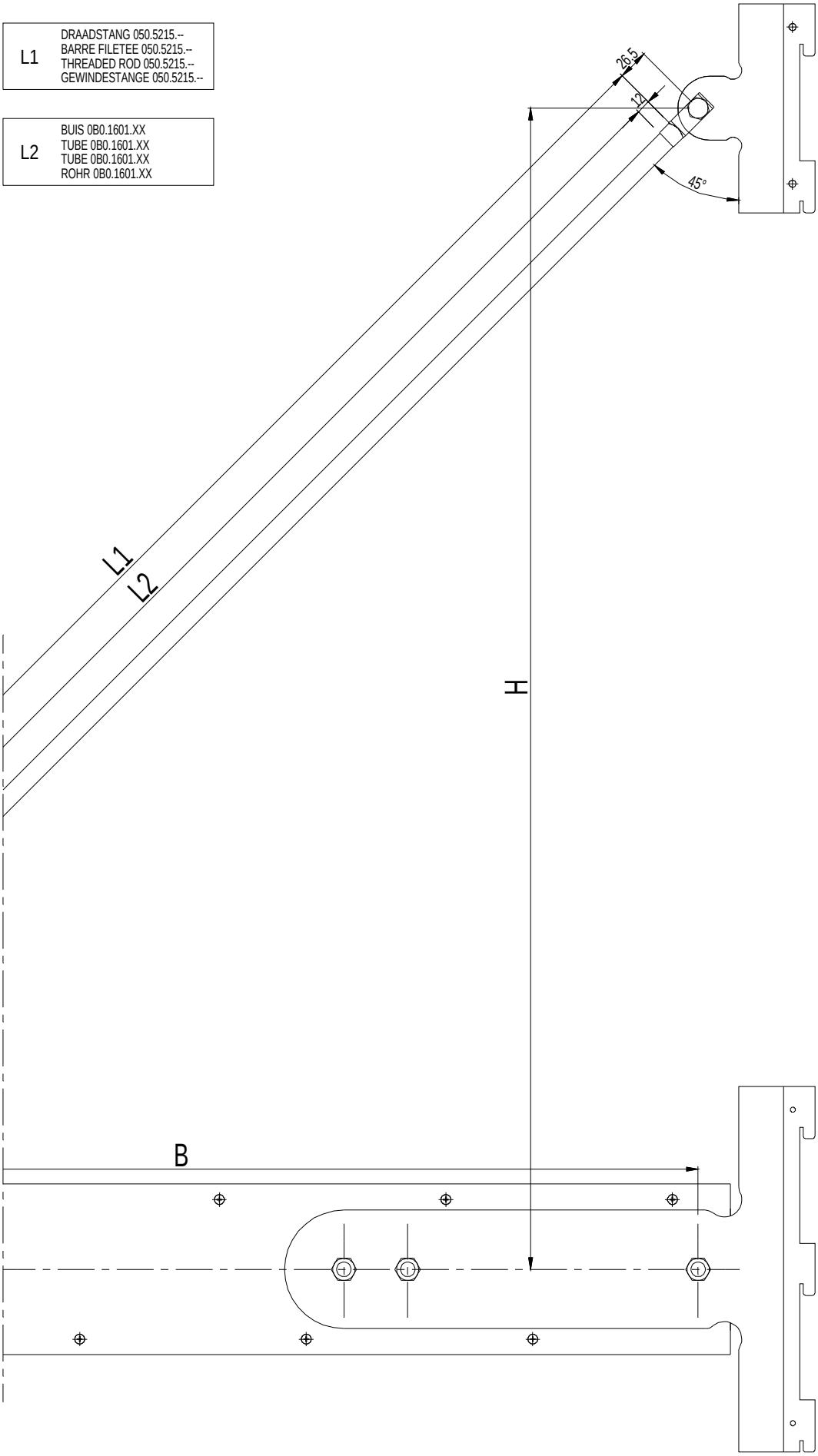

D0062169

MONTAGE LAMEL HOUDER
ASSEMBLAGE SUPPORT-LAME
ASSEMBLY LOUVRE GRIP
MONTAGE LAMELLEN HALTER

n = AANTAL LAMELLEN
n = NOMBRE DE LAMES
n = NUMBER OF LOUVRES
n = ANZAHL LAMELLEN

* PER LAMEL
* PAR LAME
* PER LOUVRE
* PER LAMELLE

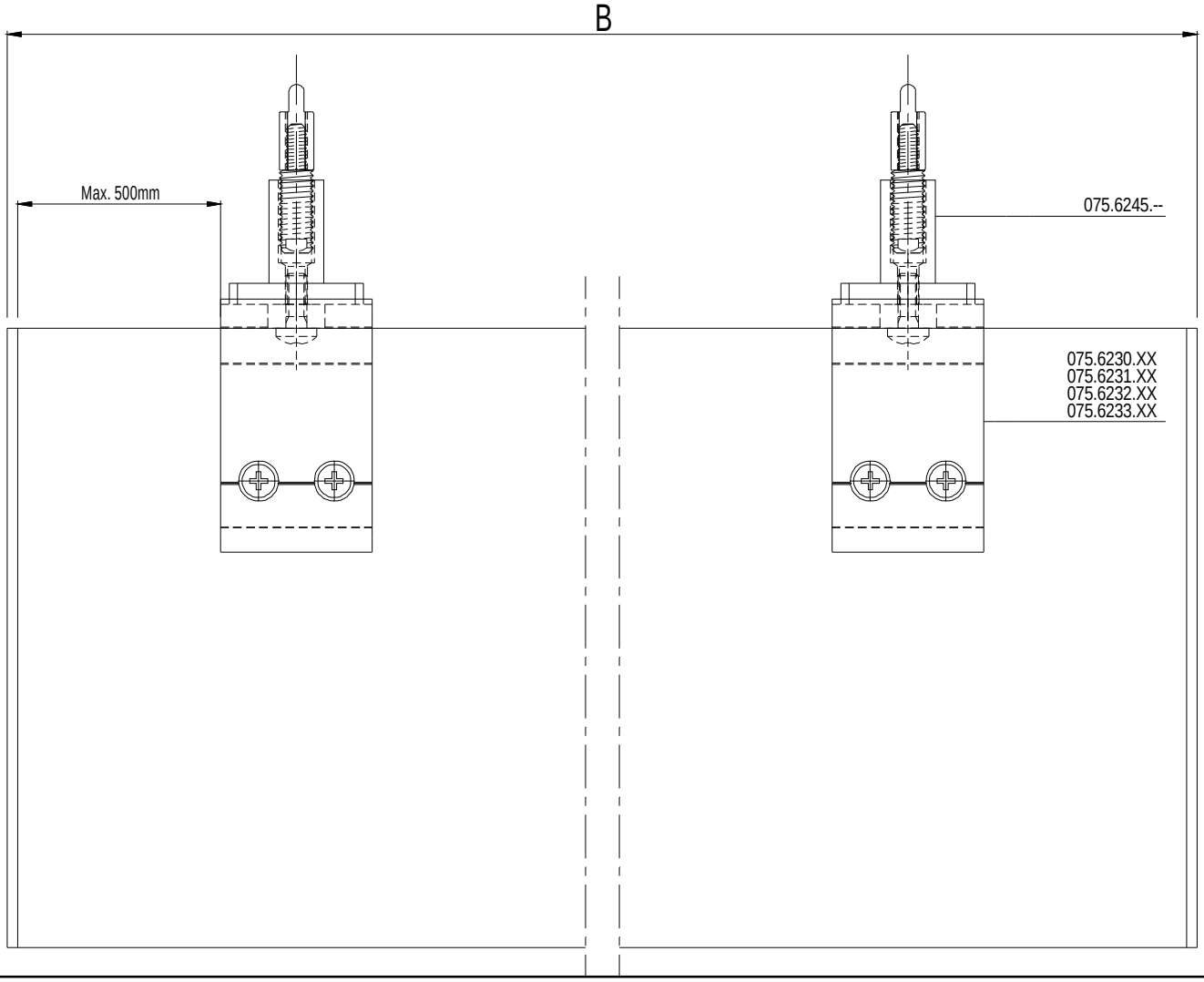

E

MONTAGE LAMEL HOUDER
ASSEMBLAGE SUPPORT-LAME
ASSEMBLY LOUVRE GRIP
MONTAGE LAMELLEN HALTER

			#	Lm	
038.1003.XX			n	B - 6	56.C...

		#	
075.6023.XX		2 *	56.G...
052.5311.--		4 *	56.G...
075.6245.--		2 *	56.G...
075.6230.XX		2 *	56.G...
of - ou - or - oder			
075.6231.XX		2 *	56.G...
of - ou - or - oder			
075.6232.XX		2 *	56.G...
of - ou - or - oder			
075.6233.XX		2 *	56.G...

			#	Lm	
038.1004.XX			n	B - 10	56.C...

		#	
075.6024.XX		2 *	56.G...
052.5311.--		8 *	56.G...
075.6245.--		2 *	56.G...
075.6230.XX		2 *	56.G...
of - ou - or - oder			
075.6231.XX		2 *	56.G...
of - ou - or - oder			
075.6232.XX		2 *	56.G...
of - ou - or - oder			
075.6233.XX		2 *	56.G...

			#	Lm	
038.1005.XX			n	B - 10	56.C...

		#	
075.6025.XX		2 *	56.G...
052.5311.--		8 *	56.G...
075.6245.--		2 *	56.G...
075.6230.XX		2 *	56.G...
of - ou - or - oder			
075.6231.XX		2 *	56.G...
of - ou - or - oder			
075.6232.XX		2 *	56.G...
of - ou - or - oder			
075.6233.XX		2 *	56.G...

E

D0062468

MONTAGE LAMEL HOUDER DILATATIE
ASSEMBLAGE SUPPORT-LAME DILATATION
ASSEMBLY LOUVRE GRIP DILATATION
MONTAGE LAMELLEN HALTER AUSDEHNUNG

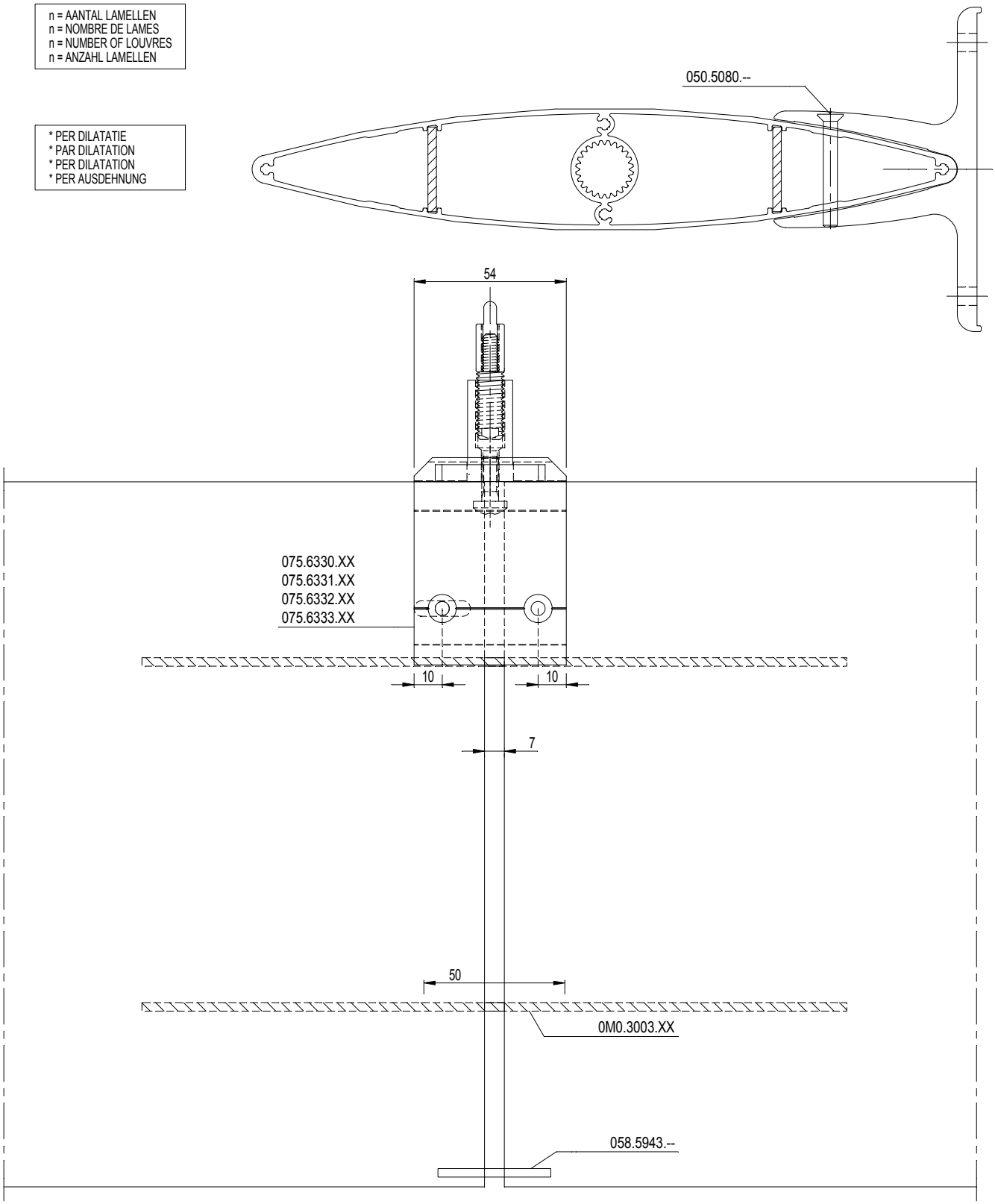

E

MONTAGE LAMEL HOUDER DILATATIE
ASSEMBLAGE SUPPORT-LAME DILATATION
ASSEMBLY LOUVRE GRIP DILATATION
MONTAGE LAMELLEN HALTER AUSDEHNUNG

			#	Lm	
038.1003.XX			n	B - 6	56.C...

		#	
075.6023.XX		2 *	56.G...
052.5311.--		4 *	56.G...
075.6245.--		2 *	56.G...
075.6330.XX		1 *	56.G...
of - ou - or - oder			
075.6331.XX		1 *	56.G...
of - ou - or - oder			
075.6332.XX		1 *	56.G...
of - ou - or - oder			
075.6333.XX		1 *	56.G...

			#	Lm	
038.1004.XX			n	B - 10	56.C...

		#	
075.6024.XX		2 *	56.G...
052.5311.--		8 *	56.G...
075.6245.--		2 *	56.G...
075.6330.XX		1 *	56.G...
of - ou - or - oder			
075.6331.XX		1 *	56.G...
of - ou - or - oder			
075.6332.XX		1 *	56.G...
of - ou - or - oder			
075.6333.XX		1 *	56.G...

			#	Lm	
038.1005.XX			n	B - 10	56.C...

		#	
075.6025.XX		2 *	56.G...
052.5311.--		8 *	56.G...
075.6245.--		2 *	56.G...
075.6330.XX		1 *	56.G...
of - ou - or - oder			
075.6331.XX		1 *	56.G...
of - ou - or - oder			
075.6332.XX		1 *	56.G...
of - ou - or - oder			
075.6333.XX		1 *	56.G...

E

D0067107

BS 100

BEREKENING LAMEL
CALCULATION LAME
CALCULATION LOUVRE
BERECHNUNG LAMELLE

$F = \frac{P \times b \times L}{2}$ (voor 075.6088.-- / 075.6258.--)

Fmax = 1200 N

(*) fmax onder eigengewicht = l/1000
(*) fmax sous poids propre = l/1000
(*) fmax under death load = l/1000
(*) fmax unter Eigengewicht = l/1000

Neerwaardse belasting - Pressions descendantes - Downward loads - Abwärtse Belastung
Max. overspanning berekend met - la portée max. calculée avec - Max. spans calculated with - Die Max. spanweite wind berechnet mit : fmax = l/150 MAX 20mm (*)

	0° 500Pa	15°	30°	45°	0° 1000Pa	15°	30°	45°	0° 1500Pa	15°	30°	45°
038.1000.XX	2470	2499	2591	2744	2210	2213	2221	2234	1954	1956	1961	1968
038.1001.XX	2666	2697	2797	2972	2393	2396	2405	2419	2117	2118	2124	2132
038.1002.XX	3045	3080	3194	3346	2798	2801	2812	2830	2476	2479	2485	2496
038.1003.XX	3225	3262	3383	3524	3000	3003	3012	3027	2656	2659	2667	2679
038.1004.XX	3500	3541	3672	3765	3206	3209	3219	3235	2903	2906	2915	2928
038.1005.XX	3780	3824	3966	4021	3425	3429	3440	3458	3129	3131	3138	3149
038.1006.XX	4631	4685	4739	4788	4084	4089	4103	4127	3734	3738	3747	3762

Opwaartse belasting - Pressions ascendantes - Upward loads - Aufwärtse Belastung
Max. overspanning berekend met - la portée max. calculée avec - Max. spans calculated with - Die Max. spanweite wind berechnet mit : fmax = l/150 MAX 20mm (*)

	0° 500Pa	15°	30°	45°	0° 1000Pa	15°	30°	45°	0° 1500Pa	15°	30°	45°
038.1000.XX	2470	2499	2591	2773	2395	2392	2381	2364	2062	2060	2054	2044
038.1001.XX	2666	2697	2797	2993	2597	2593	2581	2562	2235	2232	2226	2216
038.1002.XX	3045	3080	3194	3418	3042	3038	3026	3009	2626	2623	2615	2602
038.1003.XX	3225	3262	3383	3620	3214	3210	3197	3178	2824	2821	2812	2797
038.1004.XX	3500	3541	3672	3929	3441	3436	3422	3401	3068	3065	3057	3045
038.1005.XX	3780	3824	3966	4243	3686	3681	3666	3642	3285	3282	3273	3260
038.1006.XX	4631	4685	4859	5198	4433	4426	4405	4372	3943	3939	3928	3909

Neerwaardse belasting - Pressions descendantes - Downward loads - Abwärtse Belastung
Max. overspanning berekend met - la portée max. calculée avec - Max. spans calculated with - Die Max. spanweite wind berechnet mit : fmax = l/150 MAX 10mm (*)

	0° 500Pa	15°	30°	45°	0° 1000Pa	15°	30°	45°	0° 1500Pa	15°	30°	45°
038.1000.XX	2325	2329	2341	2360	2006	2008	2013	2022	1829	1830	1834	1839
038.1001.XX	2468	2472	2484	2505	2129	2131	2137	2147	1942	1943	1947	1953
038.1002.XX	2770	2775	2789	2814	2394	2396	2403	2415	2185	2186	2191	2198
038.1003.XX	2915	2921	2937	2963	2522	2525	2533	2545	2303	2304	2309	2317
038.1004.XX	3114	3120	3137	3166	2696	2699	2707	2721	2461	2463	2469	2477
038.1005.XX	3324	3330	3350	3381	2880	2883	2893	2908	2631	2633	2639	2648
038.1006.XX	3952	3960	3985	4027	3434	3438	3450	3470	3140	3143	3151	3163

Opwaartse belasting - Pressions ascendantes - Upward loads - Aufwärtse Belastung
Max. overspanning berekend met - la portée max. calculée avec - Max. spans calculated with - Die Max. spanweite wind berechnet mit : fmax = l/150 MAX 10mm (*)

	0° 500Pa	15°	30°	45°	0° 1000Pa	15°	30°	45°	0° 1500Pa	15°	30°	45°
038.1000.XX	2470	2528	2602	2571	2131	2128	2121	2110	1904	1903	1899	1892
038.1001.XX	2666	2728	2765	2732	2264	2261	2253	2241	2023	2021	2017	2010
038.1002.XX	3045	3116	3133	3091	2558	2555	2545	2530	2283	2281	2276	2267
038.1003.XX	3225	3300	3315	3269	2703	2699	2689	2672	2411	2409	2403	2393
038.1004.XX	3500	3582	3552	3501	2893	2889	2878	2860	2580	2578	2571	2561
038.1005.XX	3780	3850	3812	3755	3100	3095	3082	3062	2762	2760	2753	2741
038.1006.XX	4631	4660	4607	4527	3728	3722	3704	3677	3316	3313	3303	3287

D0061229

E

BEREKENING LAMEL HOUDER
CALCULATION SUPPORT-LAME
CALCULATION LOUVRE GRIP
BERECHNUNG LAMELLEN HALTER

LAMEL 038.1003.XX
SUPPORT-LAME 038.1003.XX
LOUVRE 038.1003.XX
LAMELLEN 038.1003.XX

M = L x (2.799 x cosα + 0.02 x P)

LAMEL HOUDER 0°
SUPPORT-LAME 0°
LOUVRE GRIP 0°
LAMELLEN HALTER 0°

Mmax = -74000 < M max < +218500

LEGENDE
M = Moment (Nmm)
L = Lengte lamel (mm)
α = Hoek lamel (0°/15°/30°/45°)
P = Druk

LAMEL 038.1004.XX
SUPPORT-LAME 038.1004.XX
LOUVRE 038.1004.XX
LAMELLEN 038.1004.XX

M = L x (4.474 x cosα + 0.031 x P)

LAMEL HOUDER 15°
SUPPORT-LAME 15°
LOUVRE GRIP 15°
LAMELLEN HALTER 15°

Mmax = -74000 < M max < +218500

LEGEND
M = Moment (Nmm)
L = length louvre (mm)
α = corner louvre (0°/15°/30°/45°)
P = Pressure on louvre

LAMEL 038.1005.XX
SUPPORT-LAME 038.1005.XX
LOUVRE 038.1005.XX
LAMELLEN 038.1005.XX

M = L x (6.698 x cosα + 0.045 x P)

LAMEL HOUDER 30°
SUPPORT-LAME 30°
LOUVRE GRIP 30°
LAMELLEN HALTER 30°

Mmax = -74000 < M max < +218500

LEGENDE
M = Moment (Nmm)
L = longueur lame (mm)
α = équerre lame (0°/15°/30°/45°)
P = Pression sur lame

LAMEL HOUDER 45°
SUPPORT-LAME 45°
LOUVRE GRIP 45°
LAMELLEN HALTER 45°

Mmax = -74000 < M max < +180000

LEGENDE
M = Moment (Nmm)
L = länge lamelle (mm)
α = Ecke lamelle (0°/15°/30°/45°)
P = Druck

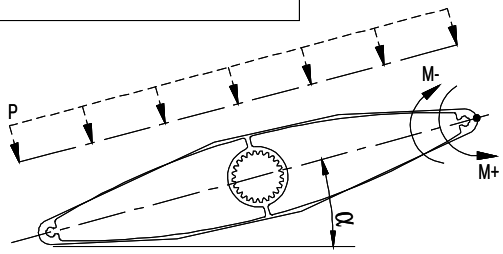

BEREKENINGSVOORBEELD
EXEMPLE DE CALCUL
CALCULATION EXAMPLE
BERECHNUNGSBEISPIEL

LAMEL 038.1003.XX
SUPPORT-LAME 038.1003.XX
LOUVRE 038.1003.XX
LAMELLEN 038.1003.XX

30°

L= 2500 mm tussen elke lamelhouder (doorlopend)
L= 2500 mm entre chaque support-lame (continue)
L= 2500 mm between every louvre grip (continued)
L= 2500 mm zwischen jede lamellen halter (durchlaufend)

P= Druk 1500Pa (langs boven)
P= Pression 1500Pa (de l'haut)
P= Pressure 1500Pa (from above)
P= Druch 1500Pa (Von Oben)

M = L x (2.799 x cosα + 0.020 x P)

M = 2500 x (2.799 x cos(30) + 0.020 x 1500)

M = +81060

-74000 < +81060 < +218500

LAMEL HOUDER OK
SUPPORT-LAME OK
LOUVRE GRIP OK
LAMELLEN HALTER OK

LAMEL 038.1005.XX
LAME 038.1005.XX
LOUVRE 038.1005.XX
LAMELLEN 038.1005.XX

45°

L= 3000 mm tussen elke lamelhouder (doorlopend)
L= 3000 mm entre chaque support-lame (continue)
L= 3000 mm between every louvre grip (continued)
L= 3000 mm zwischen jede lamellen halter (durchlaufend)

P= Druk 1500Pa (langs onder)
P= Pression 1500Pa (en bas)
P= Pressure 1500Pa (from bottom)
P= Druch 1500Pa (Von Unten)

M = L x (6.698 x cosα + 0.045 x P)

M = 3000 x (6.698 x cos(45) + 0.045 x (-1500))

M = -187509

-74000 < -187509 < +180000

LAMEL HOUDER NIET OK
SUPPORT-LAME NON OK
LOUVRE GRIP NOT OK
LAMELLEN HALTER NICHT OK

Algemene opmerking :Alle Montagebeugels / ophangsystemen werden berekend tot maximale lamel-lengte van 3.00 meter. Beweegbare lamellen fmax.=10mm
Remarque générale : Tous les collents de montage / systèmes de suspension sont protégés jusqu'a la longueur max. de la lame de 3.00m. Lames mobiles fmax.=10mm
General remark : All assembly braces / suspension systems have bean designed for a maximum length of 3.00m. Moveable louvres fmax.=10mm
Allgemeine Anmerkung : Die Montagebügel / Aufhangsysteme werden bis die max. lamellenlänge von 3.00m beschützt. Bewegliche lamellen fmax.=10mm

E

D0061229

Max Length (Downward load -45°)
fmax = l/150 or 20 mm (*)

(*) fmax onder eigengewicht = l/1000
(*) fmax sous poids propre = l/1000
(*) fmax under death load = l/1000
(*) fmax unter Eigengewicht = l/1000

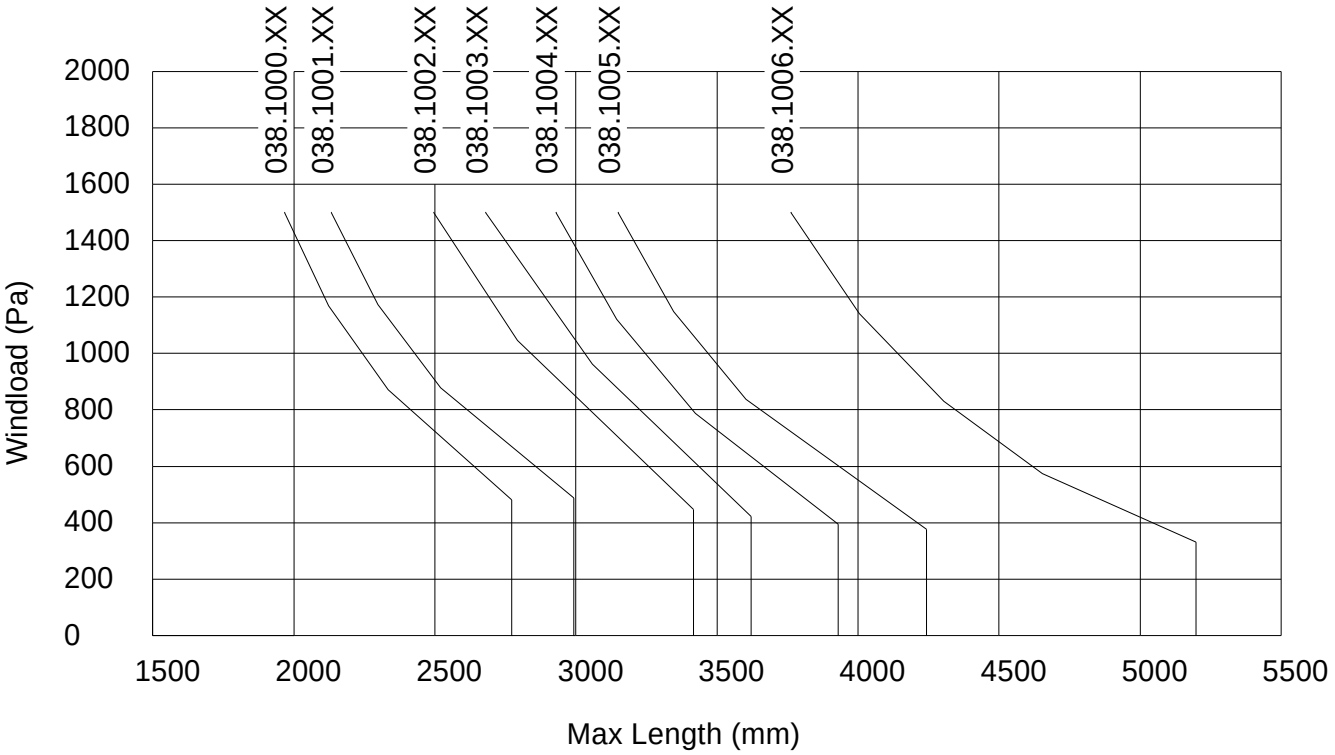

Max Length (Upward load -45°)
fmax = l/150 or 20 mm (*)

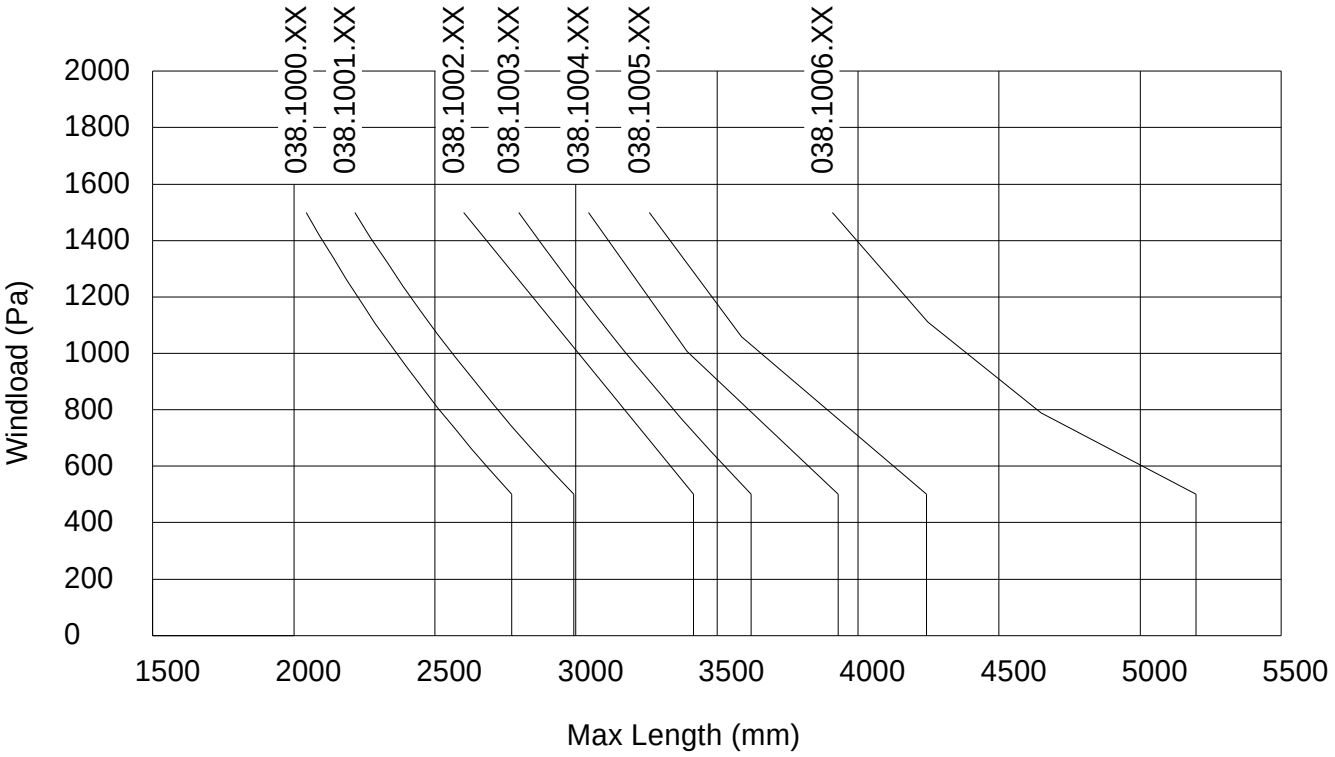

D0062740

E

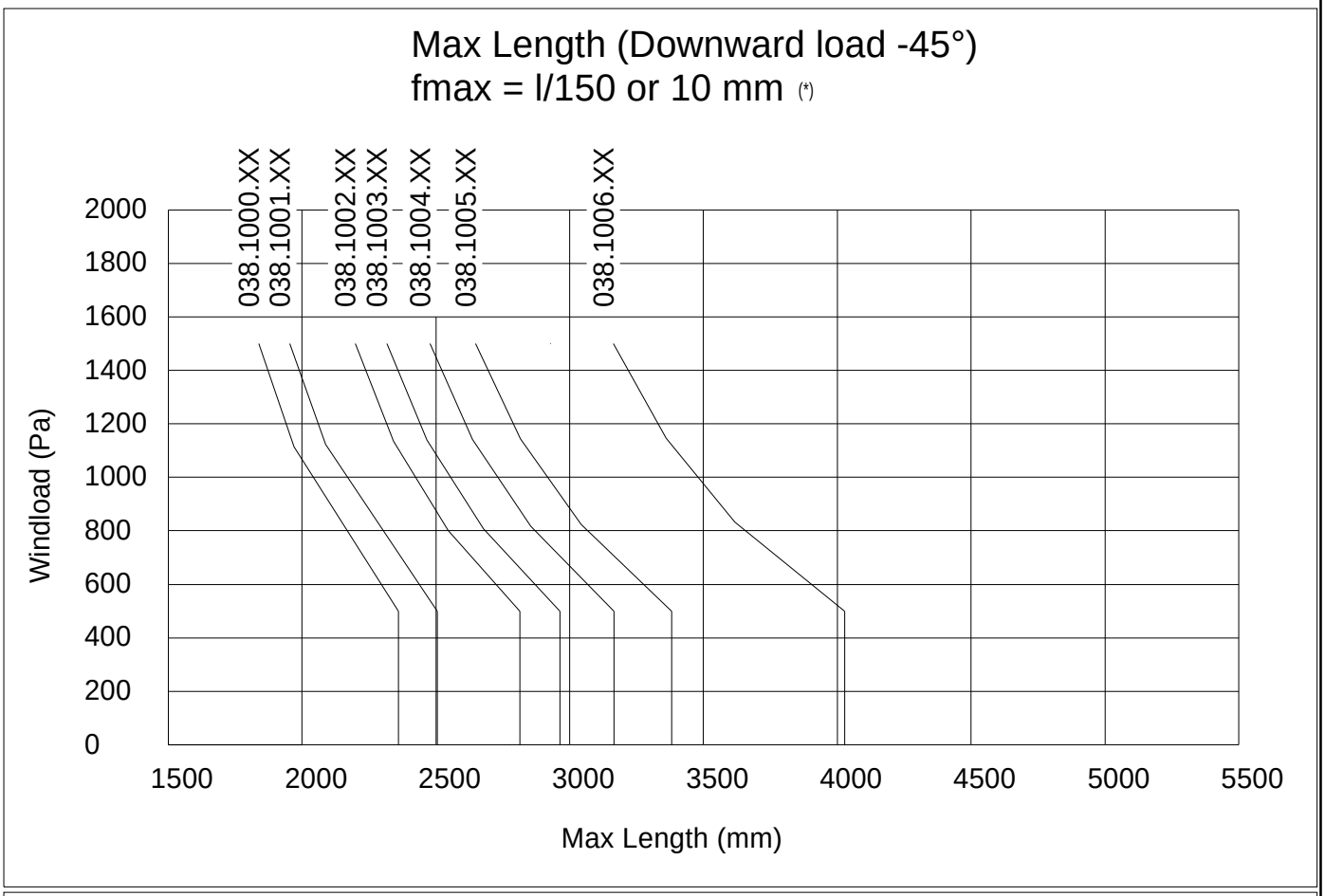
Max Length (Downward load -45°)
fmax = l/150 or 10 mm (*)
038.1000.XX
038.1001.XX
038.1002.XX
038.1003.XX
038.1004.XX
038.1005.XX
038.1006.XX
Windload (Pa)
0
200
400
600
800
1000
1200
1400
1600
1800
2000
1500
2000
2500
3000
3500
4000
4500
5000
5500
Max Length (mm)

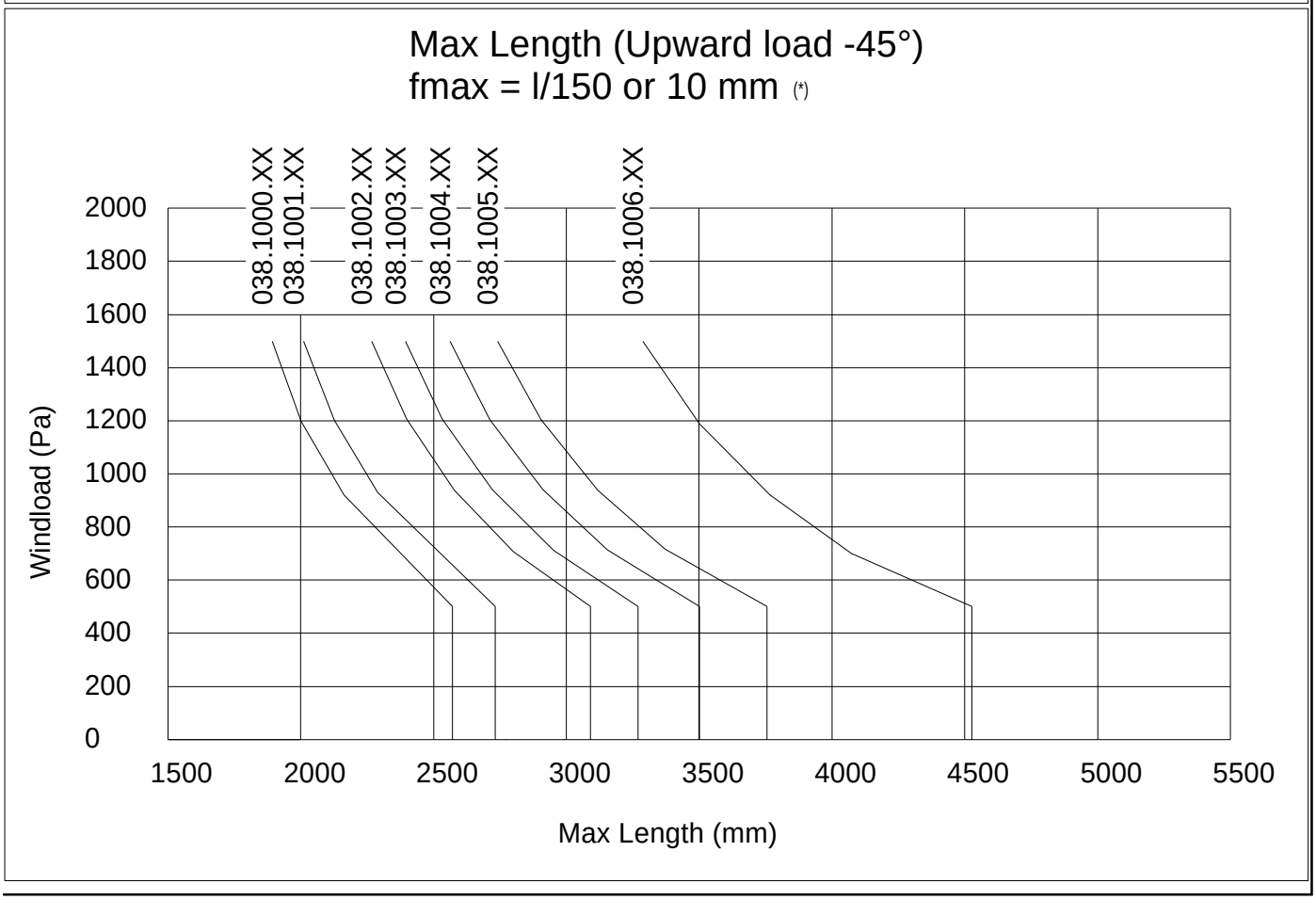
Max Length (Upward load -45°)
fmax = l/150 or 10 mm (*)
038.1000.XX
038.1001.XX
038.1002.XX
038.1003.XX
038.1004.XX
038.1005.XX
038.1006.XX
Windload (Pa)
0
200
400
600
800
1000
1200
1400
1600
1800
2000
1500
2000
2500
3000
3500
4000
4500
5000
5500
Max Length (mm)

E

D0062740

PROJECTOPLOSSING VASTE LAMELLEN
SOLUTION PROJET LAMES FIXES
PROJECT SOLUTION FIXED LOUVRES
PROJEKTLÖSUNG FESTE LAMELLEN

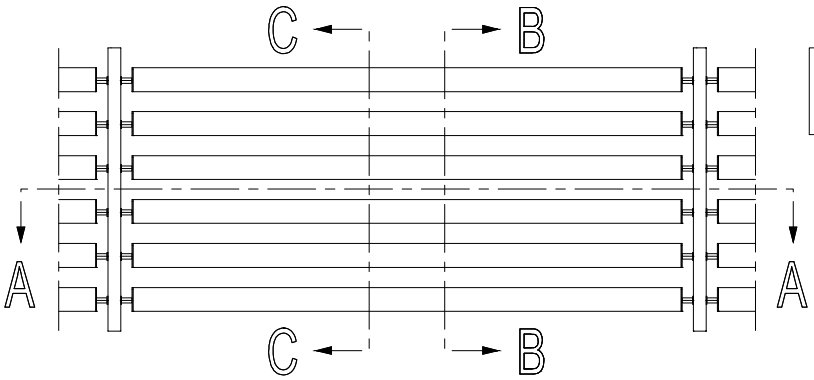

BINNENAANZICHT
VUE INTERIEURE
INSIDE VIEW
INNENSICHT

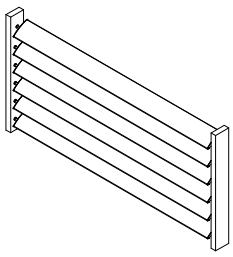

n = AANTAL LAMELLEN
n = NOMBRE DE LAMES
n = NUMBER OF LOUVRES
n = ANZAHL LAMELLEN

* PER LAMEL
* PAR LAME
* PER LOUVRE
* PER LAMELLE

			#	Lm	
038.1002.XX			n	B - 60 * 2d	56.C...
0B0.0901.XX			n	30	56.C...

		#	
075.5922.XX		1 *	
052.5311.--		2 *	56.G...
PROJECT		1 *	
052.5311.--		2 *	56.G...
053.5199.--		1 *	56.G...
075.6261.--		1*	56.G...
075.6260.--		1*	56.G...
075.6270.07		2*	56.G...
050.5394.--		2*	56.G...
054.5464.--		2*	56.G...
075.6271.07		1*	56.G...

PROJECT = PROJECTAFHANKELIJK ARTIKEL
ARTICLE DEPENDANT DU PROJET
PROJECT DEPENDING ARTICLE
VOM PROJEKTABHÄNGIGER ARTIKEL

* EINDSTUK LAMEL
075.5920.XX
075.5921.XX
075.5922.XX
075.5923.XX
075.5924.XX
075.5925.XX
075.5926.XX

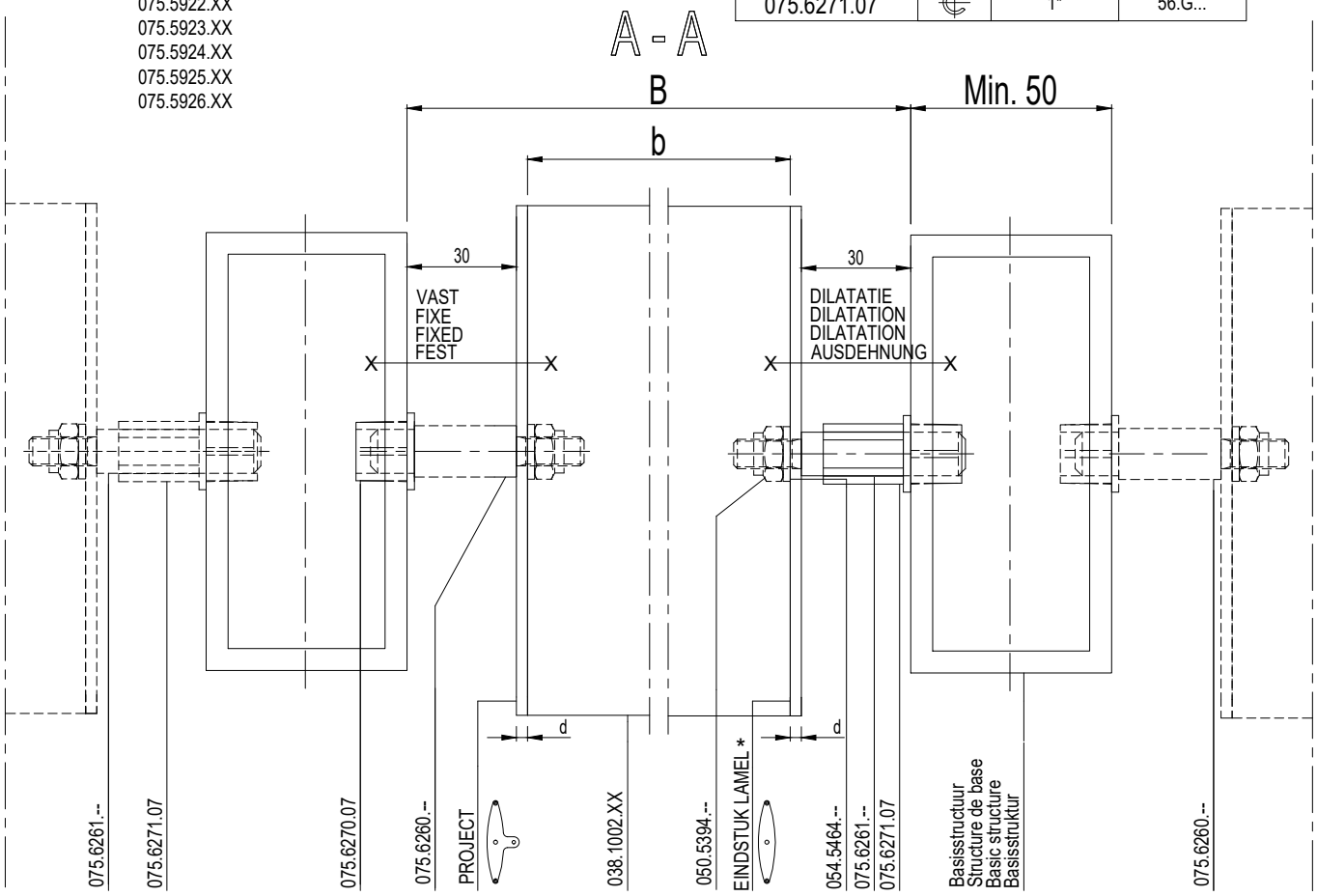

schaal - échelle
scale - Maßstab
1/2

D0062216

E

PROJECTOPLOSSING VASTE LAMELLEN
SOLUTION PROJET LAMES FIXES
PROJECT SOLUTION FIXED LOUVRES
PROJEKTLÖSUNG FESTE LAMELLEN

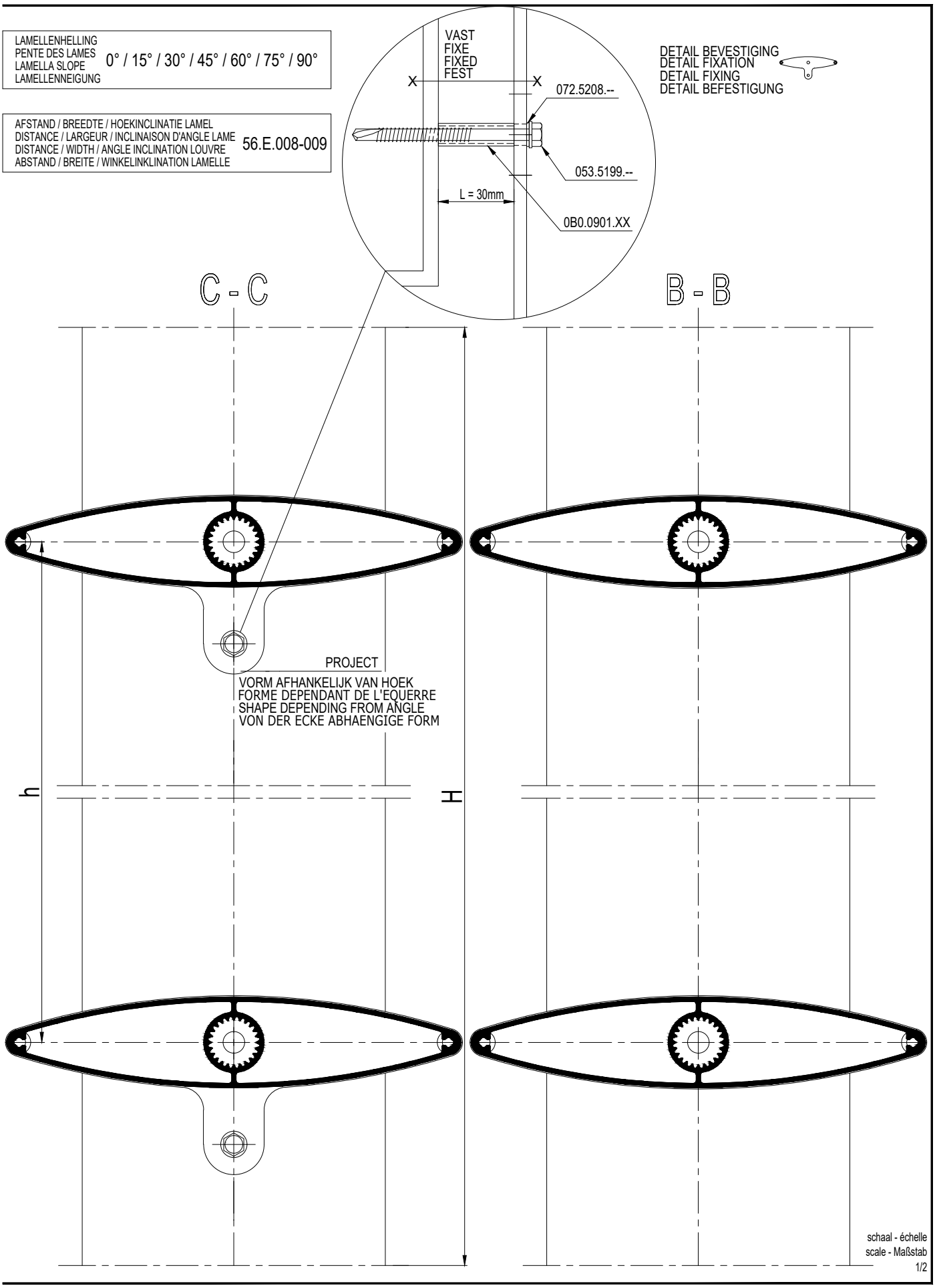

PROJECTOPLOSSING VASTE LAMELLEN
SOLUTION PROJET LAMES FIXES
PROJECT SOLUTION FIXED LOUVRES
PROJEKTLÖSUNG FESTE LAMELLEN

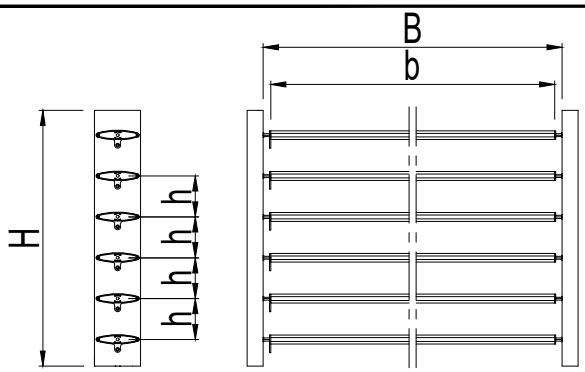

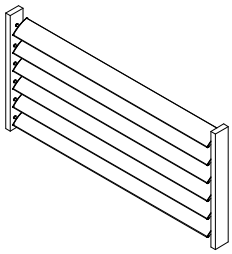

n = AANTAL LAMELLEN
n = NOMBRE DE LAMES
n = NUMBER OF LOUVRES
n = ANZAHL LAMELLEN

* PER LAMEL
* PAR LAME
* PER LOUVRE
* PER LAMELLE

			#	Lm	
038.1000.XX			n	B - 60 * 2d	56.C...
0B0.0901.XX			n	30	56.C...

		#	
075.5920.XX		1 *	
052.5311.--		2 *	56.G...
PROJECT		1 *	
052.5311.--		2 *	56.G...
053.5199.--		1 *	56.G...
075.6260.--		1 *	56.G...
075.6261.--		1 *	56.G...
054.5464.--		2 *	56.G...
050.5394.--		2 *	56.G...
075.6270.07		2 *	56.G...
075.6271.07		1*	56.G...

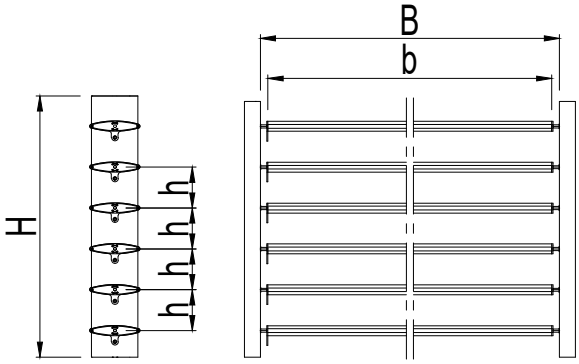

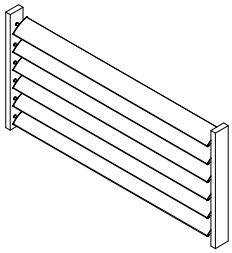

n = AANTAL LAMELLEN
n = NOMBRE DE LAMES
n = NUMBER OF LOUVRES
n = ANZAHL LAMELLEN

* PER LAMEL
* PAR LAME
* PER LOUVRE
* PER LAMELLE

			#	Lm	
038.1001.XX			n	B - 60 * 2d	56.C...
0B0.0901.XX			n	30	56.C...

		#	
075.5921.XX		1 *	
052.5311.--		2 *	56.G...
PROJECT		1 *	
052.5311.--		2 *	56.G...
053.5199.--		1 *	56.G...
075.6260.--		1 *	56.G...
075.6261.--		1 *	56.G...
054.5464.--		2 *	56.G...
050.5394.--		2 *	56.G...
075.6270.07		2 *	56.G...
075.6271.07		1*	56.G...

D0062412

E

BS 100

PROJECTOPLOSSING VASTE LAMELLEN
SOLUTION PROJET LAMES FIXES
PROJECT SOLUTION FIXED LOUVRES
PROJEKTLÖSUNG FESTE LAMELLEN

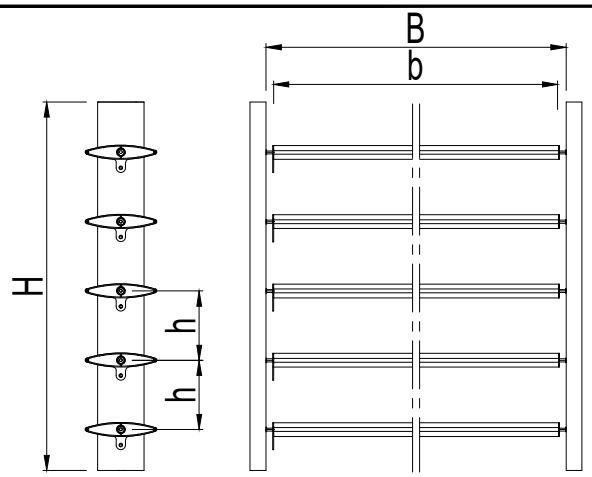

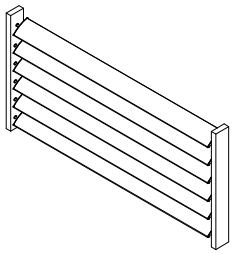

n = AANTAL LAMELLEN
n = NOMBRE DE LAMES
n = NUMBER OF LOUVRES
n = ANZAHL LAMELLEN

* PER LAMEL
* PAR LAME
* PER LOUVRE
* PER LAMELLE

038.1003.XX			n	B - 60 * 2d	56.C...
0B0.0901.XX			n	30	56.C...

		#	
075.5923.XX		1 *	
052.5311.--		2 *	56.G...
PROJECT		1 *	
052.5311.--		2 *	56.G...
053.5199.--		1 *	56.G...
075.6260.--		1 *	56.G...
075.6261.--		1 *	56.G...
054.5464.--		2 *	56.G...
050.5394.--		2 *	56.G...
075.6270.07		2 *	56.G...
075.6271.07		1*	56.G...

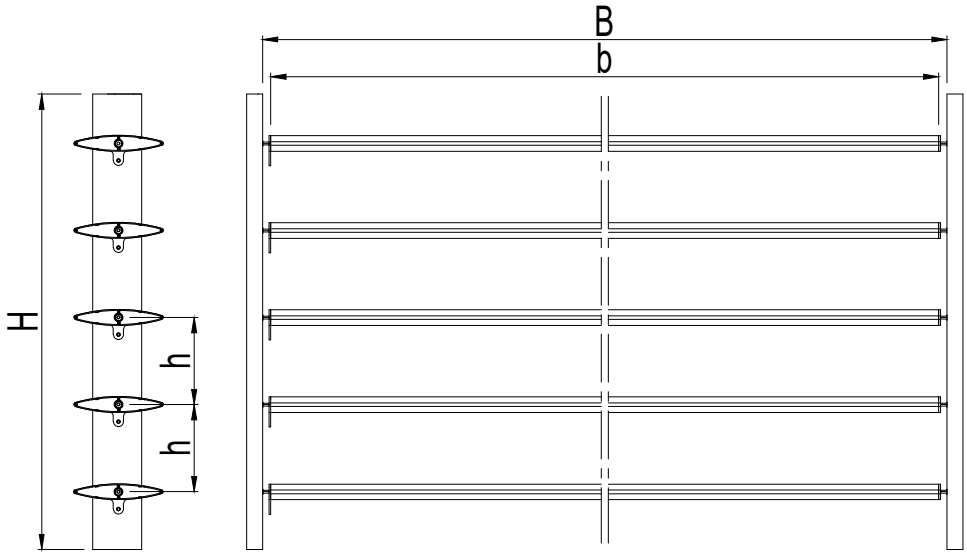

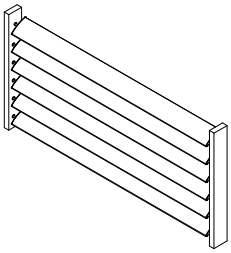

n = AANTAL LAMELLEN
n = NOMBRE DE LAMES
n = NUMBER OF LOUVRES
n = ANZAHL LAMELLEN

* PER LAMEL
* PAR LAME
* PER LOUVRE
* PER LAMELLE

038.1004.XX			n	B - 60 * 2d	56.C...
0B0.0901.XX			n	30	56.C...

		#	
075.5924.XX		1 *	
052.5311.--		4 *	56.G...
PROJECT		1 *	
052.5311.--		4 *	56.G...
053.5199.--		1 *	56.G...
075.6260.--		1 *	56.G...
075.6261.--		1 *	56.G...
054.5464.--		2 *	56.G...
050.5394.--		2 *	56.G...
075.6270.07		2 *	56.G...
075.6271.07		1*	56.G...

E

D0062412

PROJECTOPLOSSING VASTE LAMELLEN
SOLUTION PROJET LAMES FIXES
PROJECT SOLUTION FIXED LOUVRES
PROJEKTLÖSUNG FESTE LAMELLEN

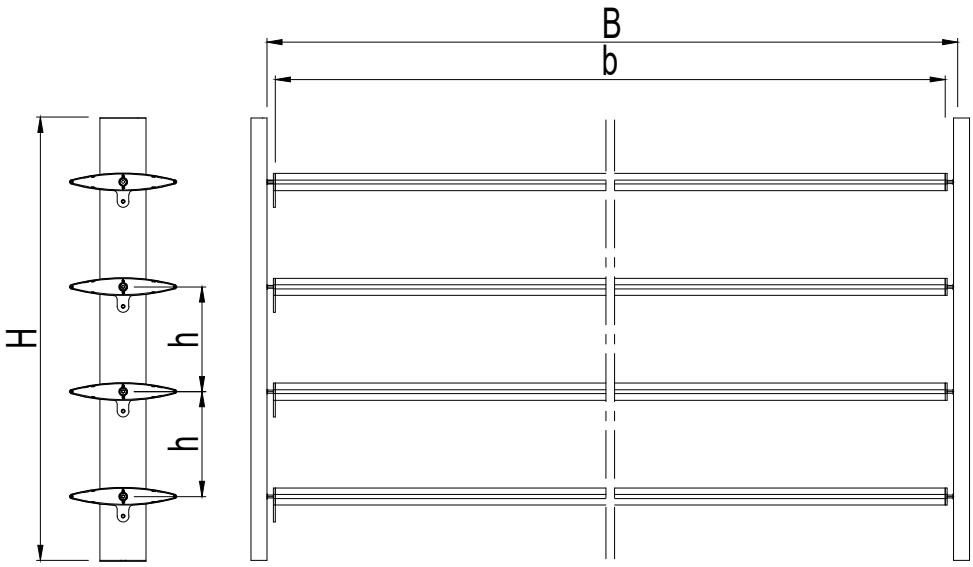

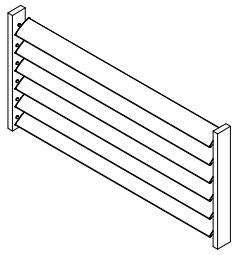

n = AANTAL LAMELLEN n = NOMBRE DE LAMES n = NUMBER OF LOUVRES n = ANZAHL LAMELLEN
* PER LAMEL * PAR LAME * PER LOUVRE * PER LAMELLE

			#	Lm	☞
038.1005.XX			n	B - 60 * 2d	56.C...
0B0.0901.XX			n	30	56.C...

		#	☞
075.5925.XX		1 *	
052.5311.--		4 *	56.G...
PROJECT		1 *	
052.5311.--		4 *	56.G...
053.5199.--		1 *	56.G...
075.6260.--		1 *	56.G...
075.6261.--		1 *	56.G...
054.5464.--		2 *	56.G...
050.5394.--		2 *	56.G...
075.6270.07		2 *	56.G...
075.6271.07		1*	56.G...

D0062415

E

BS 100

PROJECTOPLOSSING VASTE LAMELLEN
SOLUTION PROJET LAMES FIXES
PROJECT SOLUTION FIXED LOUVRES
PROJEKTLÖSUNG FESTE LAMELLEN

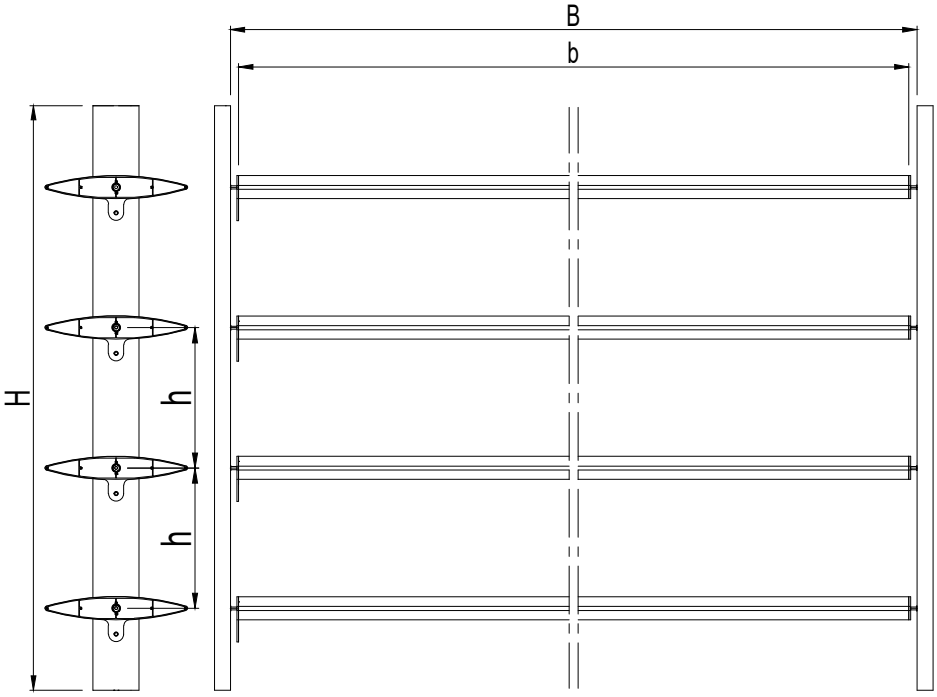

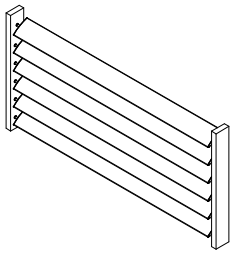

n = AANTAL LAMELLEN
n = NOMBRE DE LAMES
n = NUMBER OF LOUVRES
n = ANZAHL LAMELLEN

* PER LAMEL
* PAR LAME
* PER LOUVRE
* PER LAMELLE

			#	Lm	
038.1006.XX			n	B - 60 * 2d	56.C...
0B0.0901.XX			n	30	56.C...

		#	
075.5926.XX		1 *	
052.5311.--		6 *	56.G...
PROJECT		1 *	
052.5311.--		6 *	56.G...
053.5199.--		1 *	56.G...
075.6260.--		1 *	56.G...
075.6261.--		1 *	56.G...
054.5464.--		2 *	56.G...
050.5394.--		2 *	56.G...
075.6270.07		2 *	56.G...
075.6271.07		1*	56.G...

E

D0062415

PROJECTOPLOSSING VASTE LAMELLEN
SOLUTION PROJET LAMES FIXES
PROJECT SOLUTION FIXED LOUVRES
PROJEKTLÖSUNG FESTE LAMELLEN

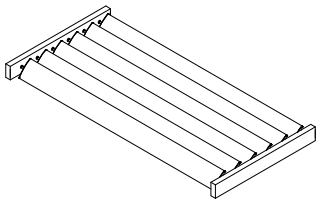

n = AANTAL LAMELLEN
n = NOMBRE DE LAMES
n = NUMBER OF LOUVRES
n = ANZAHL LAMELLEN

* PER LAMEL
* PAR LAME
* PER LOUVRE
* PER LAMELLE

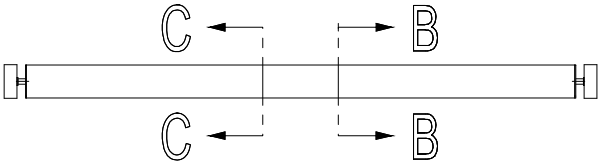

			#	Lm	
038.1002.XX			n	B - 60 * 2d	56.C...
0B0.0901.XX			n	30	56.C...

		#	
075.5922.XX		1 *	
052.5311.--		2 *	56.G...
PROJECT		1 *	
052.5311.--		2 *	56.G...
053.5199.--		1 *	56.G...
075.6261.--		1*	56.G...
075.6260.--		1*	56.G...
075.6270.07		2*	56.G...
050.5394.--		2*	56.G...
054.5464.--		2*	56.G...
075.6271.07		1*	56.G...

* EINDSTUK LAMEL
075.5920.XX
075.5921.XX
075.5922.XX
075.5923.XX
075.5924.XX
075.5925.XX
075.5926.XX

PROJECT = PROJECTAFHANKELIJK ARTIKEL
ARTICLE DEPENDANT DU PROJET
PROJECT DEPENDING ARTICLE
VOM PROJEKTABHÄNGIGER ARTIKEL

A - A

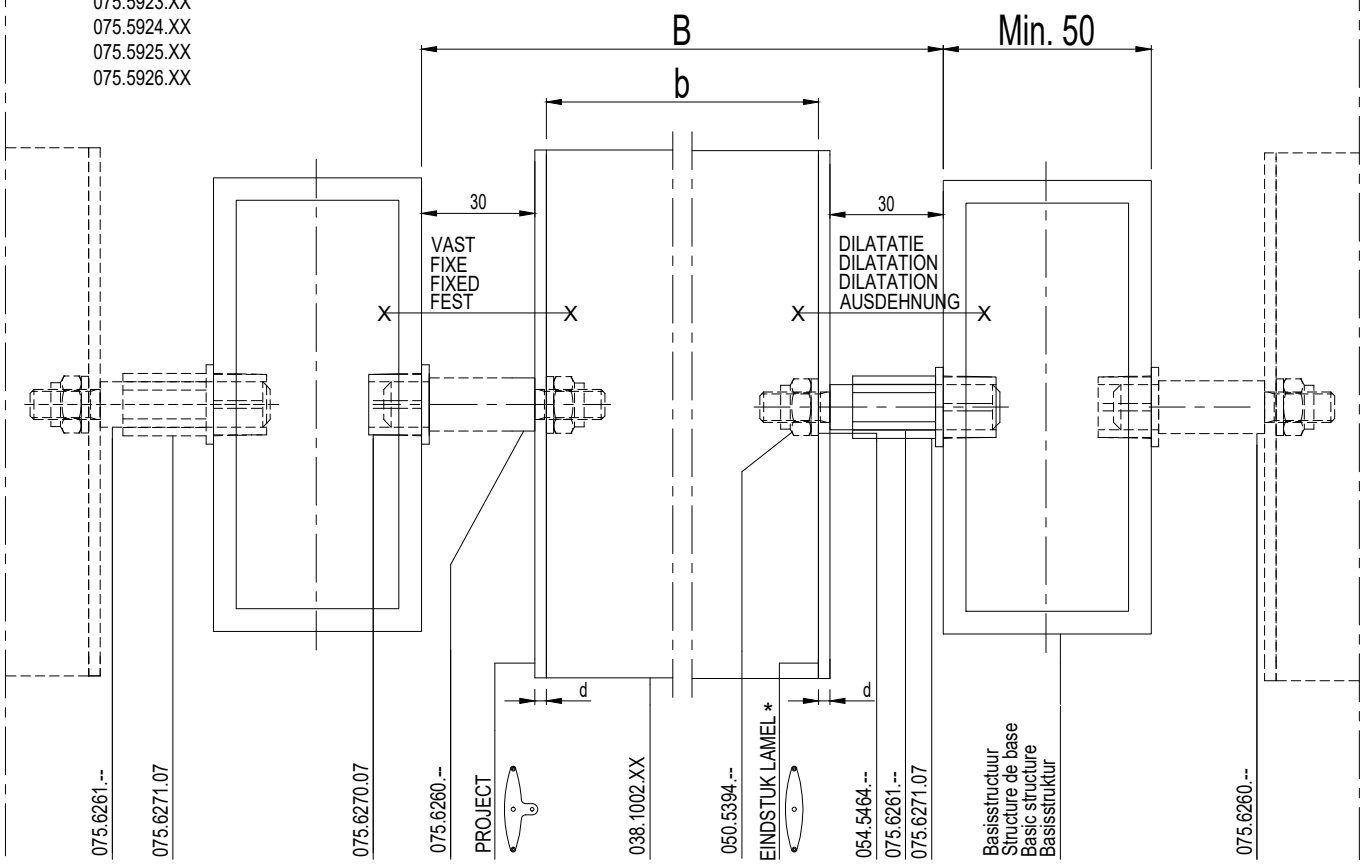

schaal - échelle
scale - Maßstab
1/2

D0062229

E

BS 100

PROJECTOPLOSSING VASTE LAMELLEN
SOLUTION PROJET LAMES FIXES
PROJECT SOLUTION FIXED LOUVRES
PROJEKTLÖSUNG FESTE LAMELLEN

LAMELLENHELLING PENTE DES LAMES LAMELLA SLOPE LAMELLENNEIGUNG	0° / 15° / 30° / 45° / 60° / 75° / 90°

AFSTAND / BREEDTE / HOEKINCLINATIE LAMEL DISTANCE / LARGEUR / INCLINAISON D'ANGLE LAME DISTANCE / WIDTH / ANGLE INCLINATION LOUVRE ABSTAND / BREITE / WINKELINKLINATION LAMELLE	56.E.016-017

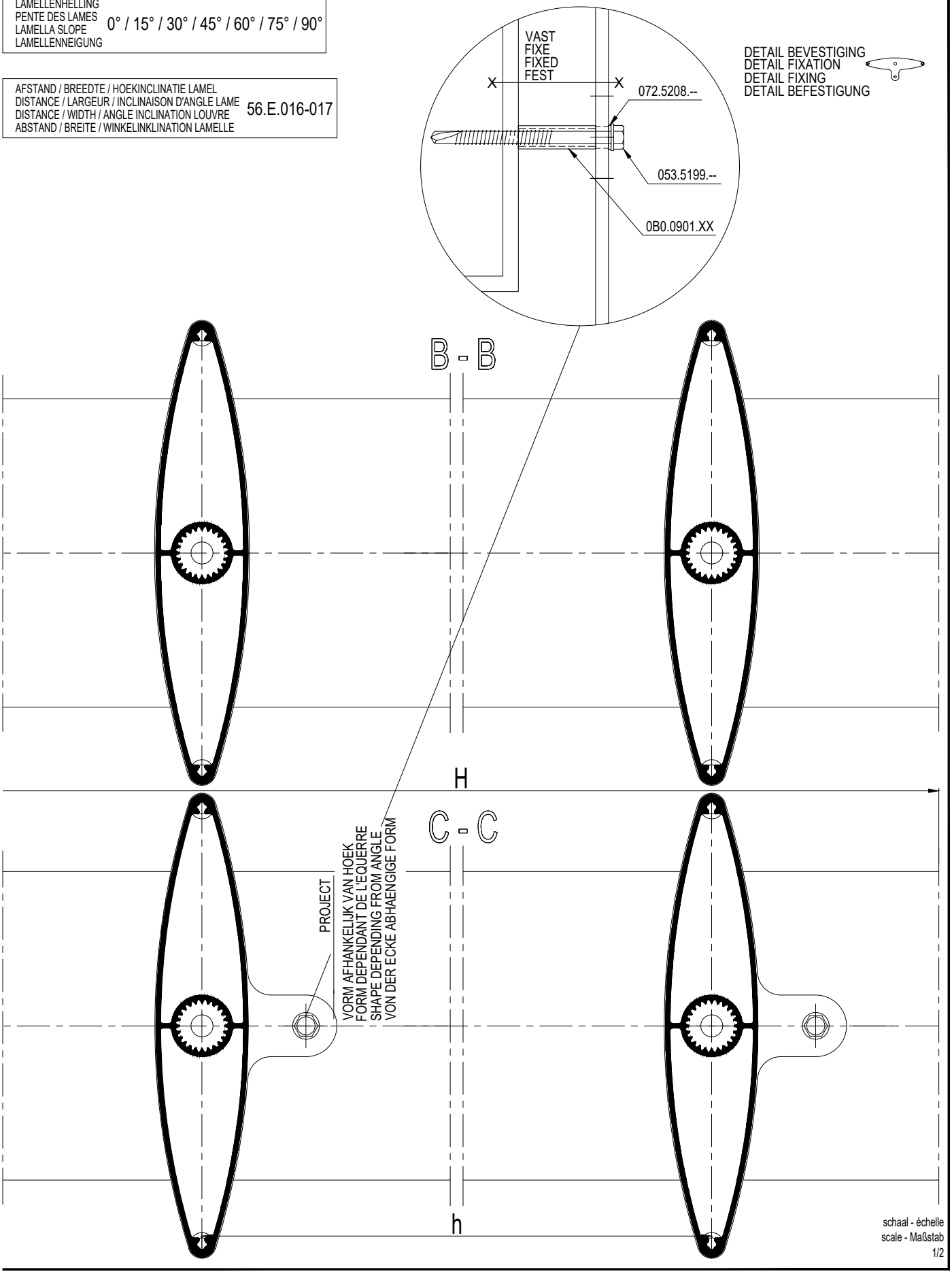

E

PROJECTOPLOSSING VASTE LAMELLEN
SOLUTION PROJET LAMES FIXES
PROJECT SOLUTION FIXED LOUVRES
PROJEKTLÖSUNG FESTE LAMELLEN

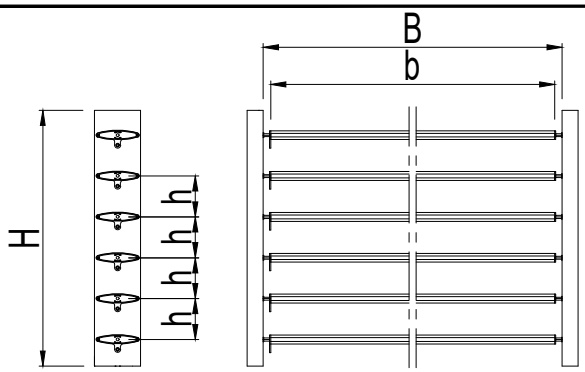

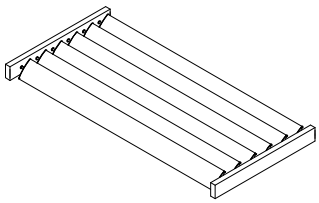

n = AANTAL LAMELLEN
n = NOMBRE DE LAMES
n = NUMBER OF LOUVRES
n = ANZAHL LAMELLEN

* PER LAMEL
* PAR LAME
* PER LOUVRE
* PER LAMELLE

			#	Lm	
038.1000.XX			n	B - 60 * 2d	56.C...
0B0.0901.XX			n	30	56.C...

		#	
075.5920.XX		1 *	
052.5311.--		2 *	56.G...
PROJECT		1 *	
052.5311.--		2 *	56.G...
053.5199.--		1 *	56.G...
075.6260.--		1 *	56.G...
075.6261.--		1 *	56.G...
054.5464.--		2 *	56.G...
050.5394.--		2 *	56.G...
075.6270.07		2 *	56.G...
075.6271.07		1*	56.G...

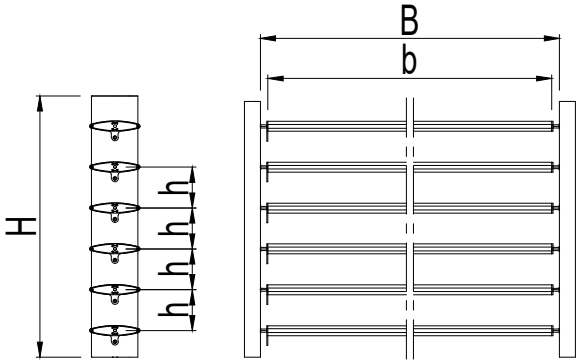

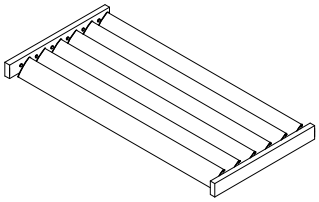

n = AANTAL LAMELLEN
n = NOMBRE DE LAMES
n = NUMBER OF LOUVRES
n = ANZAHL LAMELLEN

* PER LAMEL
* PAR LAME
* PER LOUVRE
* PER LAMELLE

			#	Lm	
038.1001.XX			n	B - 60 * 2d	56.C...
0B0.0901.XX			n	30	56.C...

		#	
075.5921.XX		1 *	
052.5311.--		2 *	56.G...
PROJECT		1 *	
052.5311.--		2 *	56.G...
053.5199.--		1 *	56.G...
075.6260.--		1 *	56.G...
075.6261.--		1 *	56.G...
054.5464.--		2 *	56.G...
050.5394.--		2 *	56.G...
075.6270.07		2 *	56.G...
075.6271.07		1*	56.G...

D0062452

E

BS 100

PROJECTOPLOSSING VASTE LAMELLEN
SOLUTION PROJET LAMES FIXES
PROJECT SOLUTION FIXED LOUVRES
PROJEKTLÖSUNG FESTE LAMELLEN

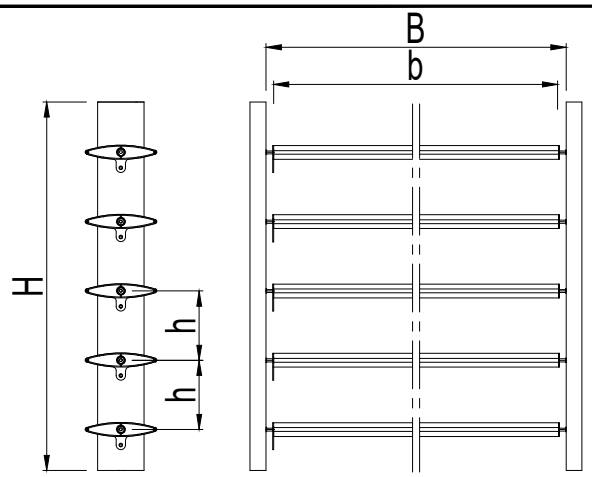

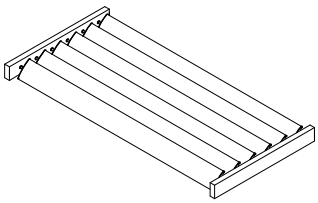

n = AANTAL LAMELLEN
n = NOMBRE DE LAMES
n = NUMBER OF LOUVRES
n = ANZAHL LAMELLEN

* PER LAMEL
* PAR LAME
* PER LOUVRE
* PER LAMELLE

			#	Lm	
038.1003.XX			n	B - 60 * 2d	56.C...
0B0.0901.XX			n	30	56.C...

		#	
075.5923.XX		1 *	
052.5311.--		2 *	56.G...
PROJECT		1 *	
052.5311.--		2 *	56.G...
053.5199.--		1 *	56.G...
075.6260.--		1 *	56.G...
075.6261.--		1 *	56.G...
054.5464.--		2 *	56.G...
050.5394.--		2 *	56.G...
075.6270.07		2 *	56.G...
075.6271.07		1*	56.G...

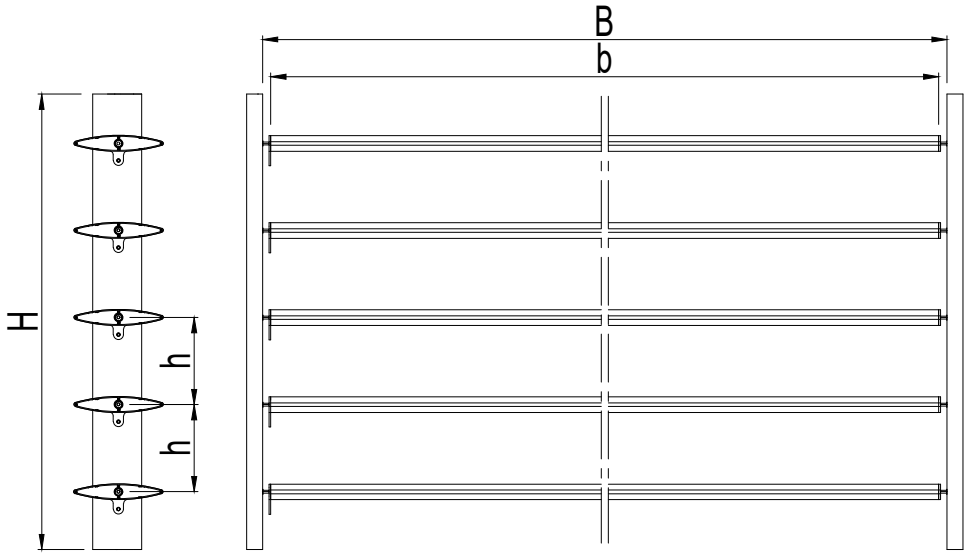

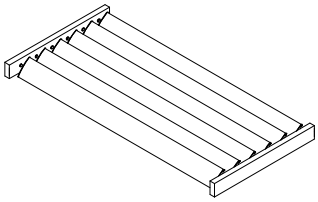

n = AANTAL LAMELLEN
n = NOMBRE DE LAMES
n = NUMBER OF LOUVRES
n = ANZAHL LAMELLEN

* PER LAMEL
* PAR LAME
* PER LOUVRE
* PER LAMELLE

			#	Lm	
038.1004.XX			n	B - 60 * 2d	56.C...
0B0.0901.XX			n	30	56.C...

		#	
075.5924.XX		1 *	
052.5311.--		4 *	56.G...
PROJECT		1 *	
052.5311.--		4 *	56.G...
053.5199.--		1 *	56.G...
075.6260.--		1 *	56.G...
075.6261.--		1 *	56.G...
054.5464.--		2 *	56.G...
050.5394.--		2 *	56.G...
075.6270.07		2 *	56.G...
075.6271.07		1*	56.G...

E

D0062452

PROJECTOPLOSSING VASTE LAMELLEN
SOLUTION PROJET LAMES FIXES
PROJECT SOLUTION FIXED LOUVRES
PROJEKTLÖSUNG FESTE LAMELLEN

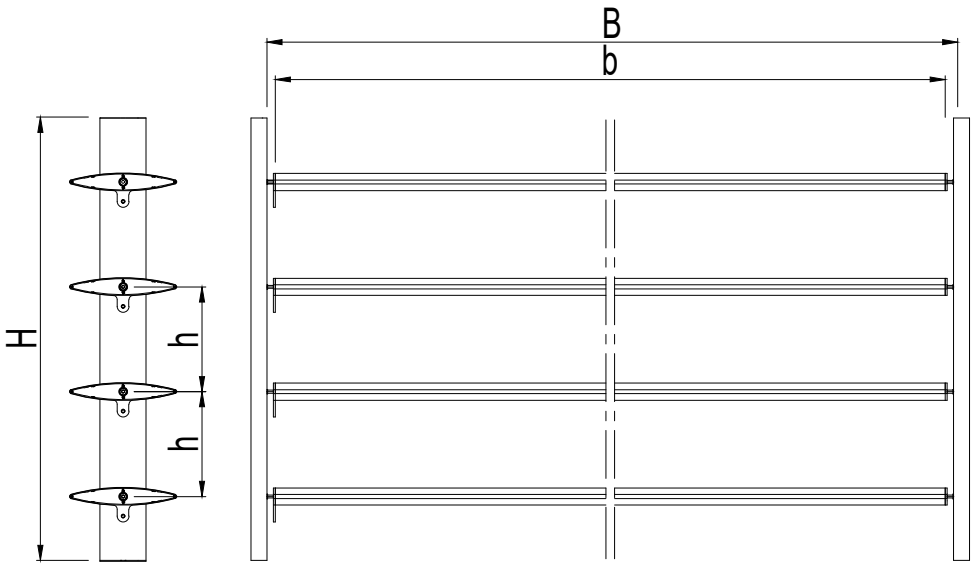

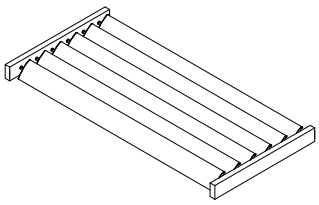

n = AANTAL LAMELLEN n = NOMBRE DE LAMES n = NUMBER OF LOUVRES n = ANZAHL LAMELLEN
* PER LAMEL * PAR LAME * PER LOUVRE * PER LAMELLE

			#	Lm	☞
038.1005.XX			n	B - 60 * 2d	56.C...
0B0.0901.XX			n	30	56.C...

		#	☞
075.5925.XX		1 *	
052.5311.--		4 *	56.G...
PROJECT		1 *	
052.5311.--		4 *	56.G...
053.5199.--		1 *	56.G...
075.6260.--		1 *	56.G...
075.6261.--		1 *	56.G...
054.5464.--		2 *	56.G...
050.5394.--		2 *	56.G...
075.6270.07		2 *	56.G...
075.6271.07		1*	56.G...

D0062454

E

BS 100

PROJECTOPLOSSING VASTE LAMELLEN
SOLUTION PROJET LAMES FIXES
PROJECT SOLUTION FIXED LOUVRES
PROJEKTLÖSUNG FESTE LAMELLEN

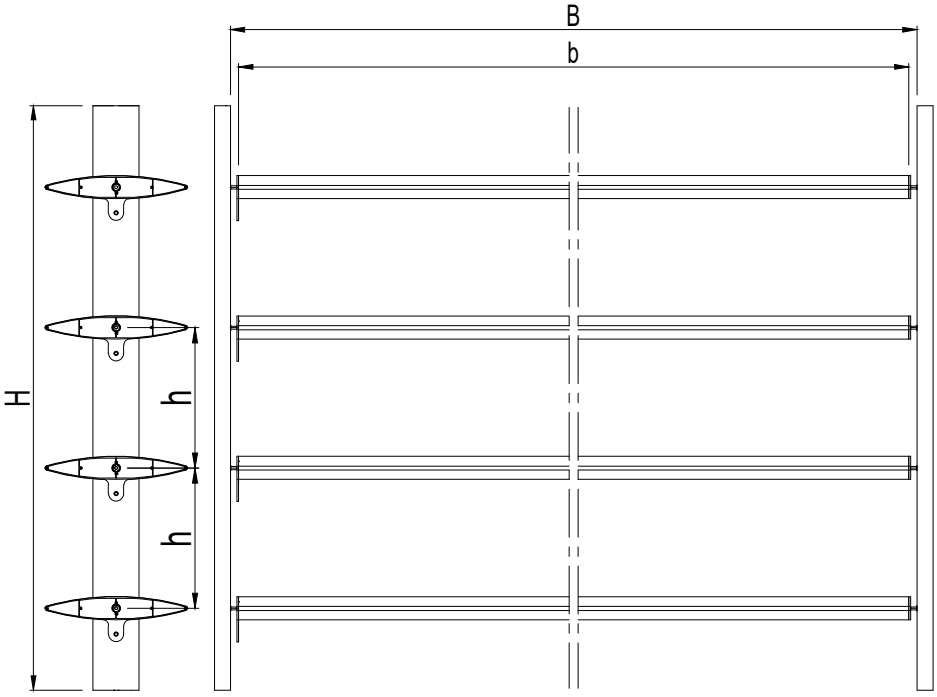

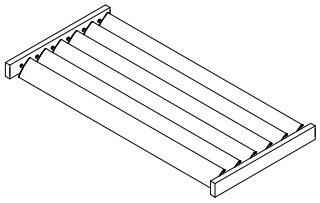

n = AANTAL LAMELLEN n = NOMBRE DE LAMES n = NUMBER OF LOUVRES n = ANZAHL LAMELLEN
* PER LAMEL * PAR LAME * PER LOUVRE * PER LAMELLE

			#	Lm	
038.1006.XX			n	B - 60 * 2d	56.C...
0B0.0901.XX			n	30	56.C...

		#	
075.5926.XX		1 *	
052.5311.--		6 *	56.G...
PROJECT		1 *	
052.5311.--		6 *	56.G...
053.5199.--		1 *	56.G...
075.6260.--		1 *	56.G...
075.6261.--		1 *	56.G...
054.5464.--		2 *	56.G...
050.5394.--		2 *	56.G...
075.6270.07		2 *	56.G...
075.6271.07		1*	56.G...

E

D0062454

PROJECTOPLOSSING BEWEEGBARE LAMELLEN
SOLUTION PROJET LAMES MOBILES
PROJECT SOLUTION MOBILE LOUVRES
PROJEKTLÖSUNG BEWEGBARE LAMELLEN

schaal - échelle
scale - Maßstab
1/2

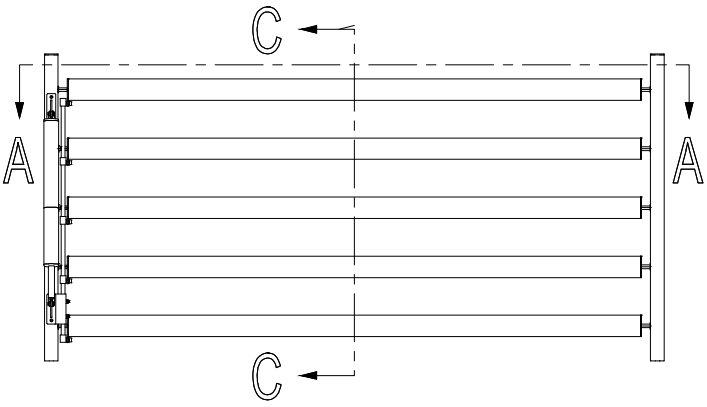

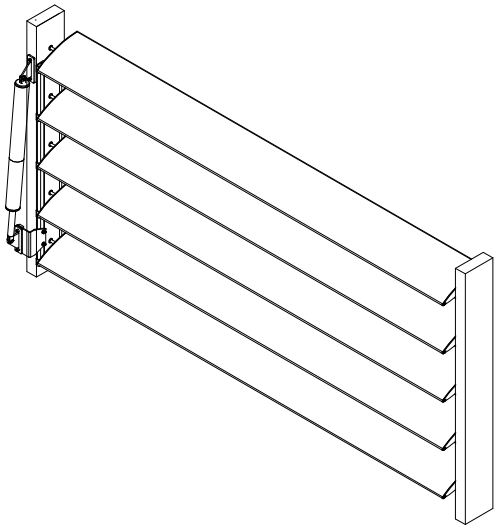

BINNENAANZICHT
VUE INTERIEURE
INSIDE VIEW
INNENSICHT

LAMELLENHELLING
PENTE DES LAMES
LAMELLA SLOPE
LAMELLENNEIGUNG
VARIABEL

PROJECT = PROJECTAFHANKELIJK ARTIKEL
ARTICLE DEPENDANT DU PROJET
PROJECT DEPENDING ARTICLE
VOM PROJEKT ABHÄNGIGER ARTIKEL

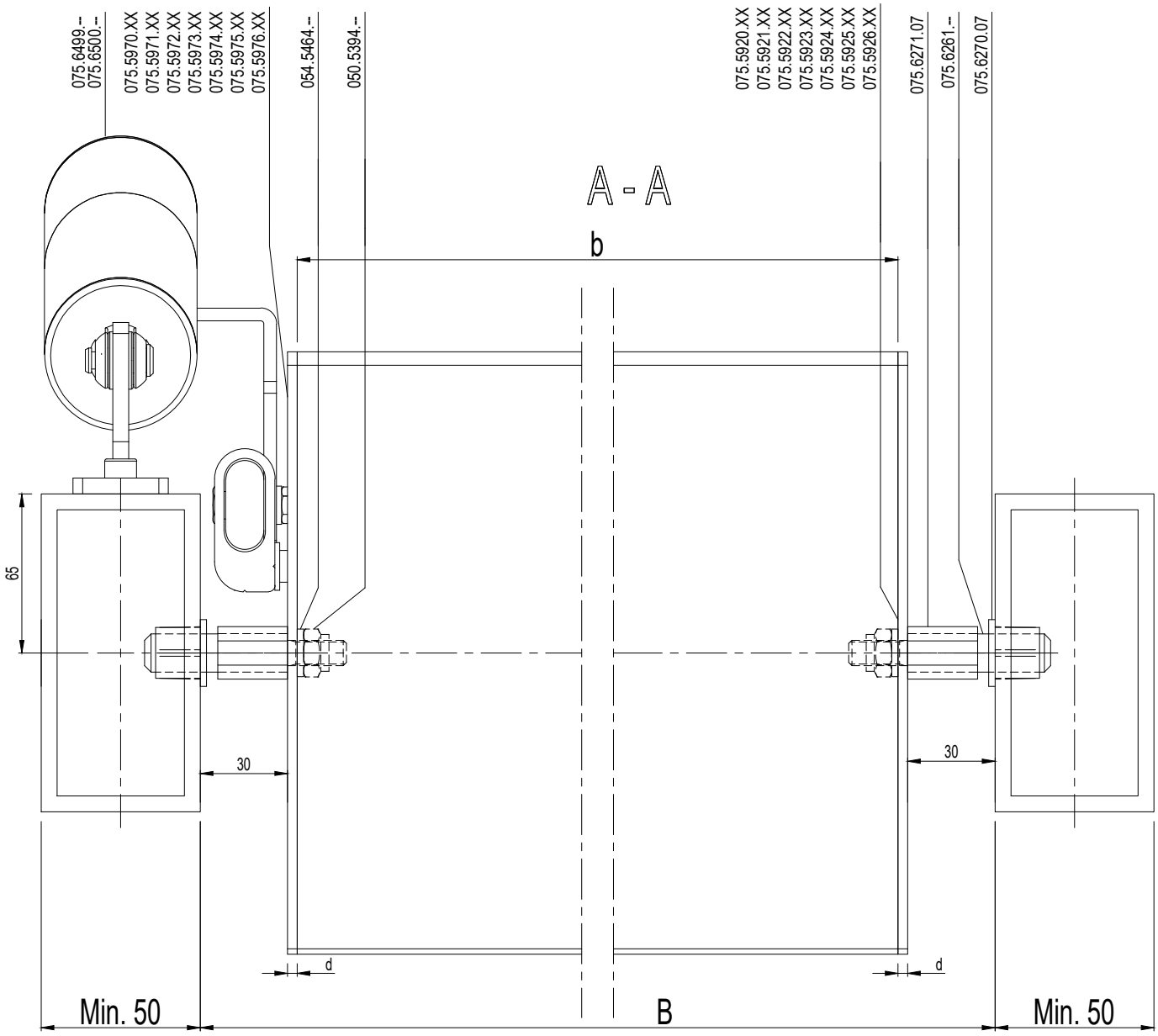

E

BS 100

PROJECTOPLOSSING BEWEEGBARE LAMELLEN
SOLUTION PROJET LAMES MOBILES
PROJECT SOLUTION MOBILE LOUVRES
PROJEKTLÖSUNG BEWEGBARE LAMELLEN

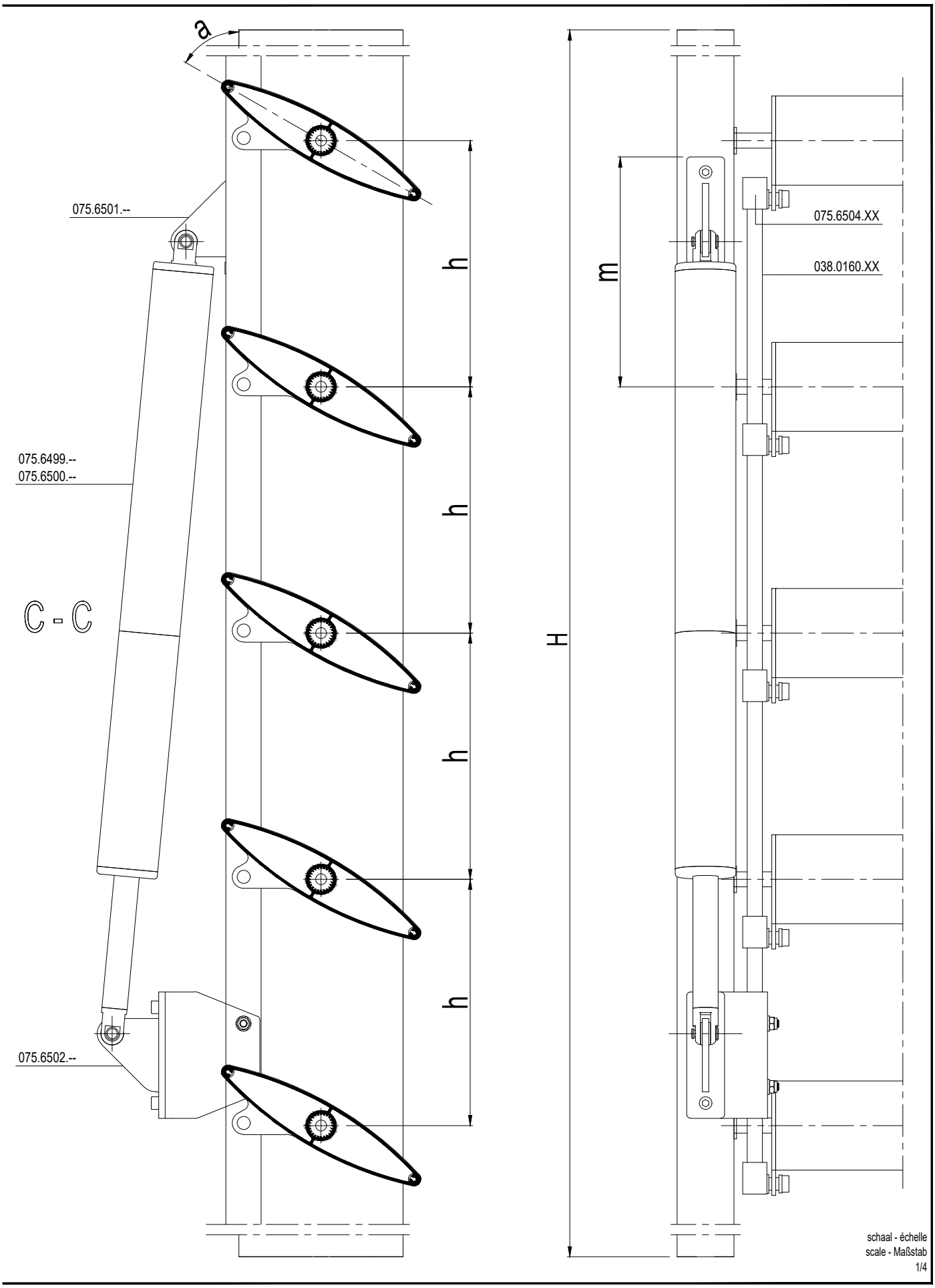

E

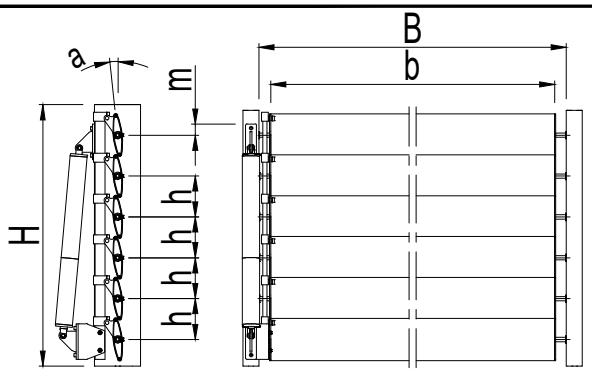

a: min. 6° (*)
a: max. 140°

h: 115 mm
m: 31 mm

n = AANTAL LAMELLEN
n = NOMBRE DE LAMES
n = NUMBER OF LOUVRES
n = ANZAHL LAMELLEN

(*) : BIJ MINIMUM SLAG VAN MOTOR
(*) : A COURSE MINIMAL DU MOTEUR
(*) : AT MINIMUM STROKE OF MOTOR
(*) : AM MINIMUM SCHLAG MOTOR

		#	Lm	
038.1000.XX		n	B - 60 * 2d	56.C...
0B0.0901.XX		n	30	56.C...
038.0160.XX		1	(n - 1) * h + 25	56.C...

		#	
075.5920.XX		1 * n	
052.5311.--		2 * n	56.G...
075.5970.XX		1 * n	
052.5311.--		2 * n	56.G...
075.6504.XX		n	56.G...
075.6501.--		2	56.G...
075.6502.--		1	56.G...
075.6499.--		1	56.G...
075.6261.--		2 * n	56.G...
054.5464.--		2 * n	56.G...
050.5394.--		2 * n	56.G...
075.6270.07		2 * n	56.G...
075.6271.07		2 * n	56.G...

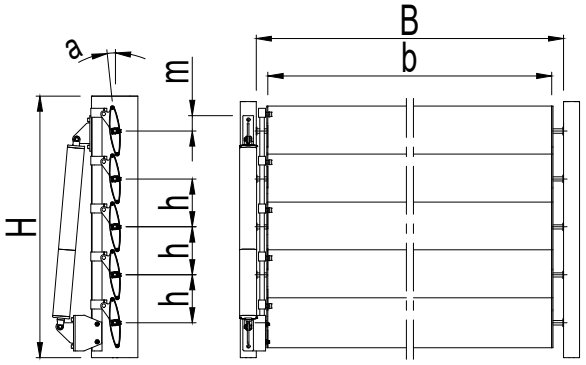

a: min. 6° (*)
a: max. 130°

h: 135 mm
m: 57 mm

n = AANTAL LAMELLEN
n = NOMBRE DE LAMES
n = NUMBER OF LOUVRES
n = ANZAHL LAMELLEN

(*) : BIJ MINIMUM SLAG VAN MOTOR
(*) : A COURSE MINIMAL DU MOTEUR
(*) : AT MINIMUM STROKE OF MOTOR
(*) : AM MINIMUM SCHLAG MOTOR

		#	Lm	
038.1001.XX		n	B - 60 * 2d	56.C...
0B0.0901.XX		n	30	56.C...
038.0160.XX		1	(n - 1) * h + 25	56.C...

		#	
075.5921.XX		1 * n	
052.5311.--		2 * n	56.G...
075.5971.XX		1 * n	
052.5311.--		2 * n	56.G...
075.6504.XX		n	56.G...
075.6501.--		2	56.G...
075.6502.--		1	56.G...
075.6499.--		1	56.G...
075.6261.--		2 * n	56.G...
054.5464.--		2 * n	56.G...
050.5394.--		2 * n	56.G...
075.6270.07		2 * n	56.G...
075.6271.07		2 * n	56.G...

D0062317

E

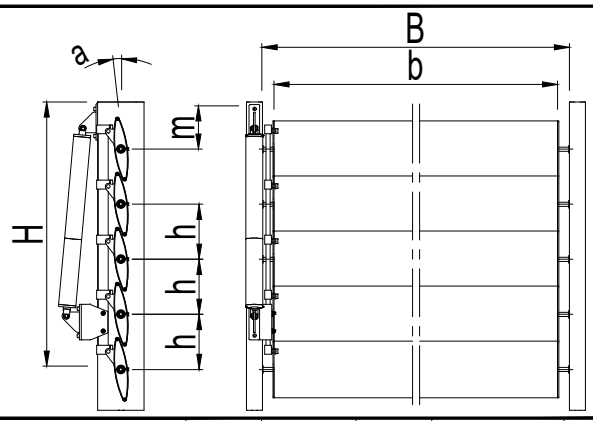

a: min. 5° (*)
a: max. 115°

h: 175 mm
m: 55 mm

n = AANTAL LAMELLEN
n = NOMBRE DE LAMES
n = NUMBER OF LOUVRES
n = ANZAHL LAMELLEN

(*) : BIJ MINIMUM SLAG VAN MOTOR
(*) : A COURSE MINIMAL DU MOTEUR
(*) : AT MINIMUM STROKE OF MOTOR
(*) : AM MINIMUM SCHLAG MOTOR

			#	Lm	
038.1002.XX			n	B - 60 * 2d	56.C...
0B0.0901.XX			n	30	56.C...
038.0160.XX			1	(n - 1) * h + 25	56.C...

		#	
075.5922.XX		1 * n	
052.5311.--		2 * n	56.G...
075.5972.XX		1 * n	
052.5311.--		2 * n	56.G...
075.6504.XX		n	56.G...
075.6501.--		2	56.G...
075.6502.--		1	56.G...
075.6499.--		1	56.G...
075.6261.--		2 * n	56.G...
054.5464.--		2 * n	56.G...
050.5394.--		2 * n	56.G...
075.6270.07		2 * n	56.G...
075.6271.07		2 * n	56.G...

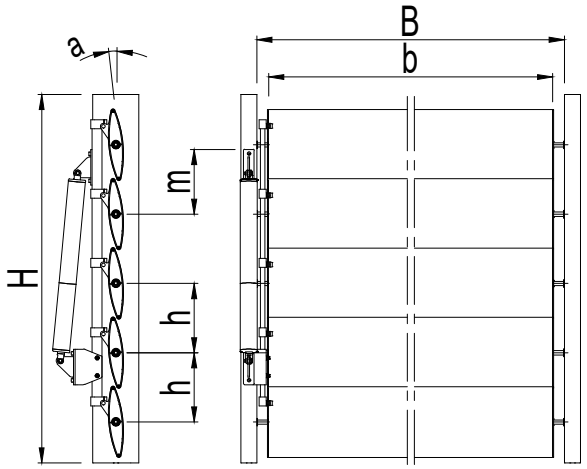

a: min. 3° (*)
a: max. 110°

h: 195 mm
m: 182 mm

n = AANTAL LAMELLEN
n = NOMBRE DE LAMES
n = NUMBER OF LOUVRES
n = ANZAHL LAMELLEN

(*) : BIJ MINIMUM SLAG VAN MOTOR
(*) : A COURSE MINIMAL DU MOTEUR
(*) : AT MINIMUM STROKE OF MOTOR
(*) : AM MINIMUM SCHLAG MOTOR

			#	Lm	
038.1003.XX			n	B - 60 * 2d	56.C...
0B0.0901.XX			n	30	56.C...
038.0160.XX			1	(n - 1) * h + 25	56.C...

		#	
075.5923.XX		1 * n	
052.5311.--		2 * n	56.G...
075.5973.XX		1 * n	
052.5311.--		2 * n	56.G...
075.6504.XX		n	56.G...
075.6501.--		2	56.G...
075.6502.--		1	56.G...
075.6499.--		1	56.G...
075.6261.--		2 * n	56.G...
054.5464.--		2 * n	56.G...
050.5394.--		2 * n	56.G...
075.6270.07		2 * n	56.G...
075.6271.07		2 * n	56.G...

E

D0062317

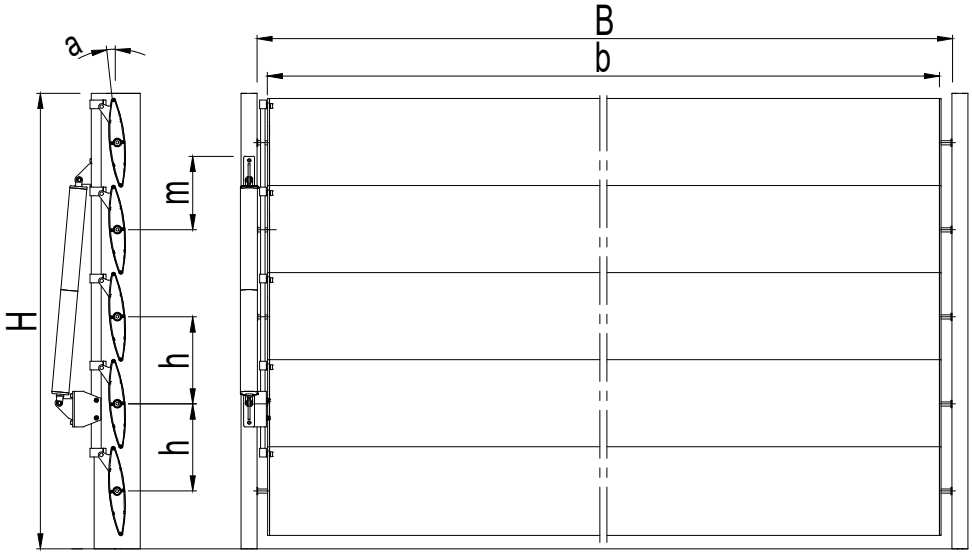

a: min. 2° (*)
a: max. 132°

n = AANTAL LAMELLEN
n = NOMBRE DE LAMES
n = NUMBER OF LOUVRES
n = ANZAHL LAMELLEN

h: 245 mm
m: 207 mm

(*) : BIJ MINIMUM SLAG VAN MOTOR
(*) : A COURSE MINIMAL DU MOTEUR
(*) : AT MINIMUM STROKE OF MOTOR
(*) : AM MINIMUM SCHLAG MOTOR

			#	Lm	
038.1004.XX			n	B - 60 * 2d	56.C...
0B0.0901.XX			n	30	56.C...
038.0160.XX			1	(n - 1) * h + 25	56.C...

		#	
075.5924.XX		1 * n	
052.5311.--		4 * n	56.G...
075.5974.XX		1 * n	
052.5311.--		4 * n	56.G...
075.6504.XX		n	56.G...
075.6501.--		2	56.G...
075.6502.--		1	56.G...
075.6500.--		1	56.G...
075.6261.--		2 * n	56.G...
054.5464.--		2 * n	56.G...
050.5394.--		2 * n	56.G...
075.6270.07		2 * n	56.G...
075.6271.07		2 * n	56.G...

E

D0062320

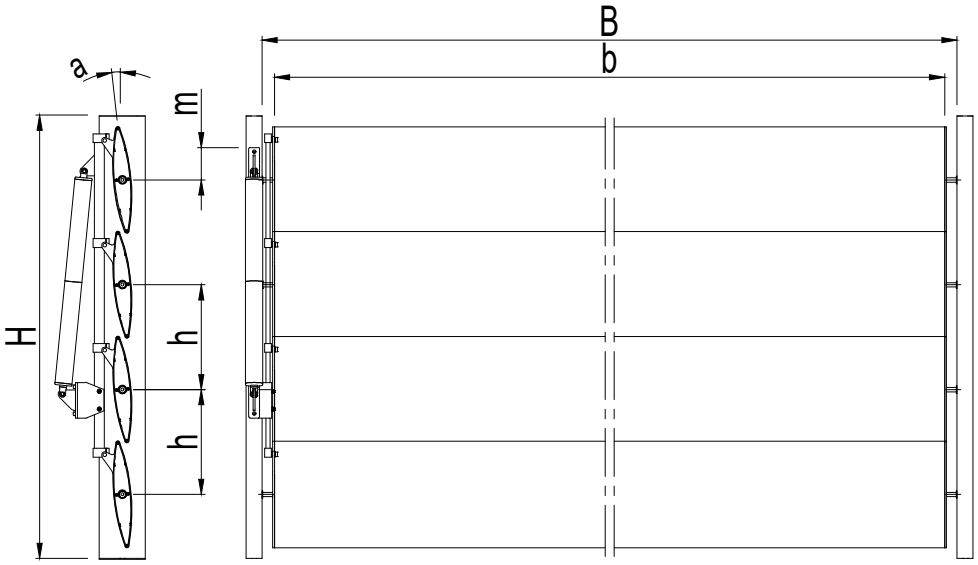

a: min. 3° (*)
a: max. 115°

n = AANTAL LAMELLEN
n = NOMBRE DE LAMES
n = NUMBER OF LOUVRES
n = ANZAHL LAMELLEN

h: 295 mm
m: 91 mm

(*) : BIJ MINIMUM SLAG VAN MOTOR
(*) : A COURSE MINIMAL DU MOTEUR
(*) : AT MINIMUM STROKE OF MOTOR
(*) : AM MINIMUM SCHLAG MOTOR

			#	Lm	
038.1005.XX			n	B - 60 * 2d	56.C...
0B0.0901.XX			n	30	56.C...
038.0160.XX			1	(n - 1) * h + 25	56.C...

		#	
075.5925.XX		1 * n	
052.5311.--		4 * n	56.G...
075.5975.XX		1 * n	
052.5311.--		4 * n	56.G...
075.6504.XX		n	56.G...
075.6501.--		2	56.G...
075.6502.--		1	56.G...
075.6500.--		1	56.G...
075.6261.--		2 * n	56.G...
054.5464.--		2 * n	56.G...
050.5394.--		2 * n	56.G...
075.6270.07		2 * n	56.G...
075.6271.07		2 * n	56.G...

E

D0062320

D0062321

BS 100

PROJECTOPLOSSING BEWEEGBARE LAMELLEN
SOLUTION PROJET LAMES MOBILES
PROJECT SOLUTION MOBILE LOUVRES
PROJEKTLÖSUNG BEWEGBARE LAMELLEN

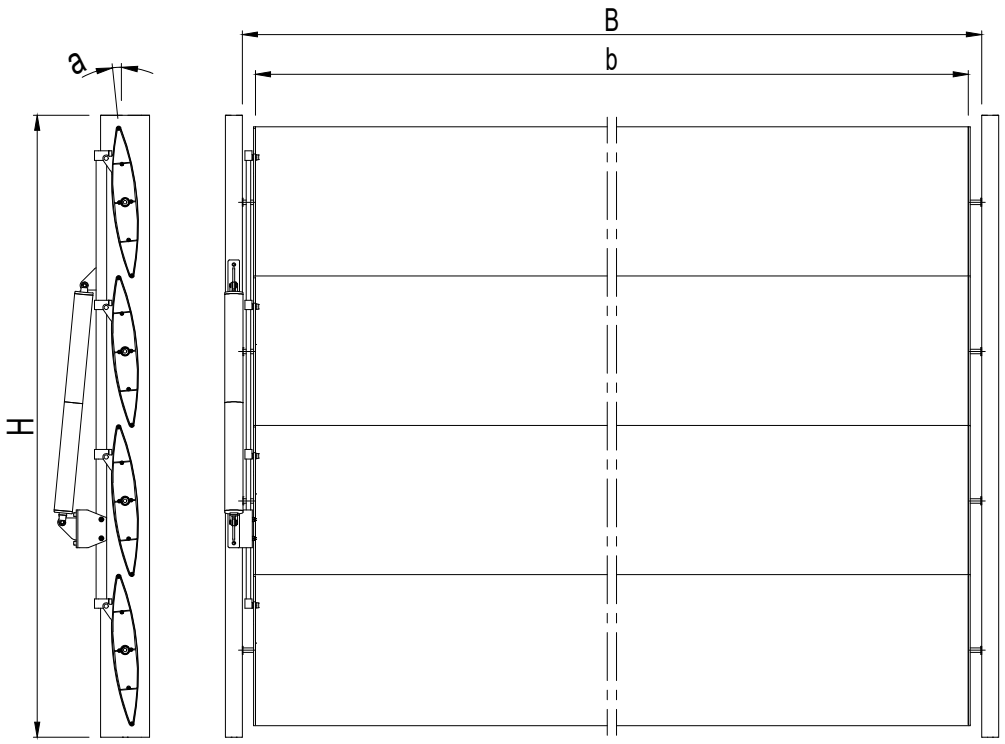

a: min. 2° (*)
a: max. 108°

n = AANTAL LAMELLEN
n = NOMBRE DE LAMES
n = NUMBER OF LOUVRES
n = ANZAHL LAMELLEN

h: 395 mm
m: 242 mm

(*) : BIJ MINIMUM SLAG VAN MOTOR
(*) : A COURSE MINIMAL DU MOTEUR
(*) : AT MINIMUM STROKE OF MOTOR
(*) : AM MINIMUM SCHLAG MOTOR

			#	Lm	
038.1006.XX			n	B - 60 * 2d	56.C...
0B0.0901.XX			n	30	56.C...
038.0160.XX			1	(n - 1) * h + 25	56.C...

		#	
075.5926.XX		1 * n	
052.5311.--		6 * n	56.G...
075.5976.XX		1 * n	
052.5311.--		6 * n	56.G...
075.6504.XX		n	56.G...
075.6501.--		2	56.G...
075.6502.--		1	56.G...
075.6500.--		1	56.G...
075.6261.--		2 * n	56.G...
054.5464.--		2 * n	56.G...
050.5394.--		2 * n	56.G...
075.6270.07		2 * n	56.G...
075.6271.07		2 * n	56.G...

E

D0062321

BS 100

GLASS LOUVRES VAST IN VERTICAAL VLAK
GLASS LOUVRES FIXES DANS UN PLAN VERTICAL
FIXED GLASS LOUVRES IN A VERTICAL PLANE
FESTE GLASS LOUVRES IN EINER VERTIKALE EBENE

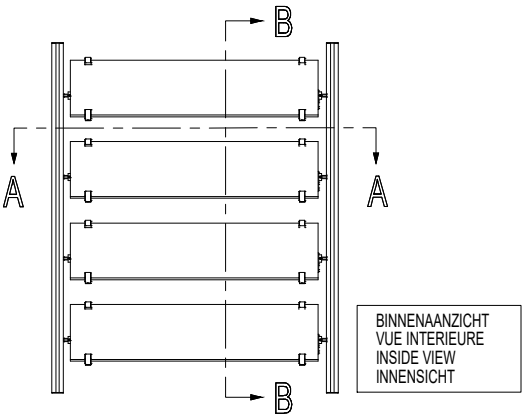

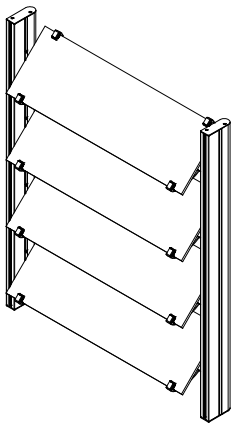

(**) PRESSURE (Pa)	Calculated values (mm)		
800	1450	1400	1350
1200	1340	1200	1180
1600	1260	1000	1050
2000	1200	800	910
2400	1150	667	760
2800	1050	571	650
3200	1020	500	570

MAX. LENGTE GLAS : ZIE GLASLEVERANCIER
LONGUEUR MAX. DE VERRE : VOIR FOURNISSEUR DE VERRE
MAX. LENGTH OF GLASS : SEE GLASS SUPPLIER
MAX. GLASLAENGE : SIEHE GLASLIEFERANT

b = B-105

			#	Lm	
038.0120.XX			2	H - 5	56.C...
			(n - 1) . 2	h - 90	
			4	H - 95 - h .(n - 1) / 2	
038.0100.XX			2	H - 5	56.C...
038.0104.XX			n	b = B - 115	56.C...
038.0120.XX			4	51.5	56.C...
			(m-1).2	b - 103 - (m.17) / m - 1	

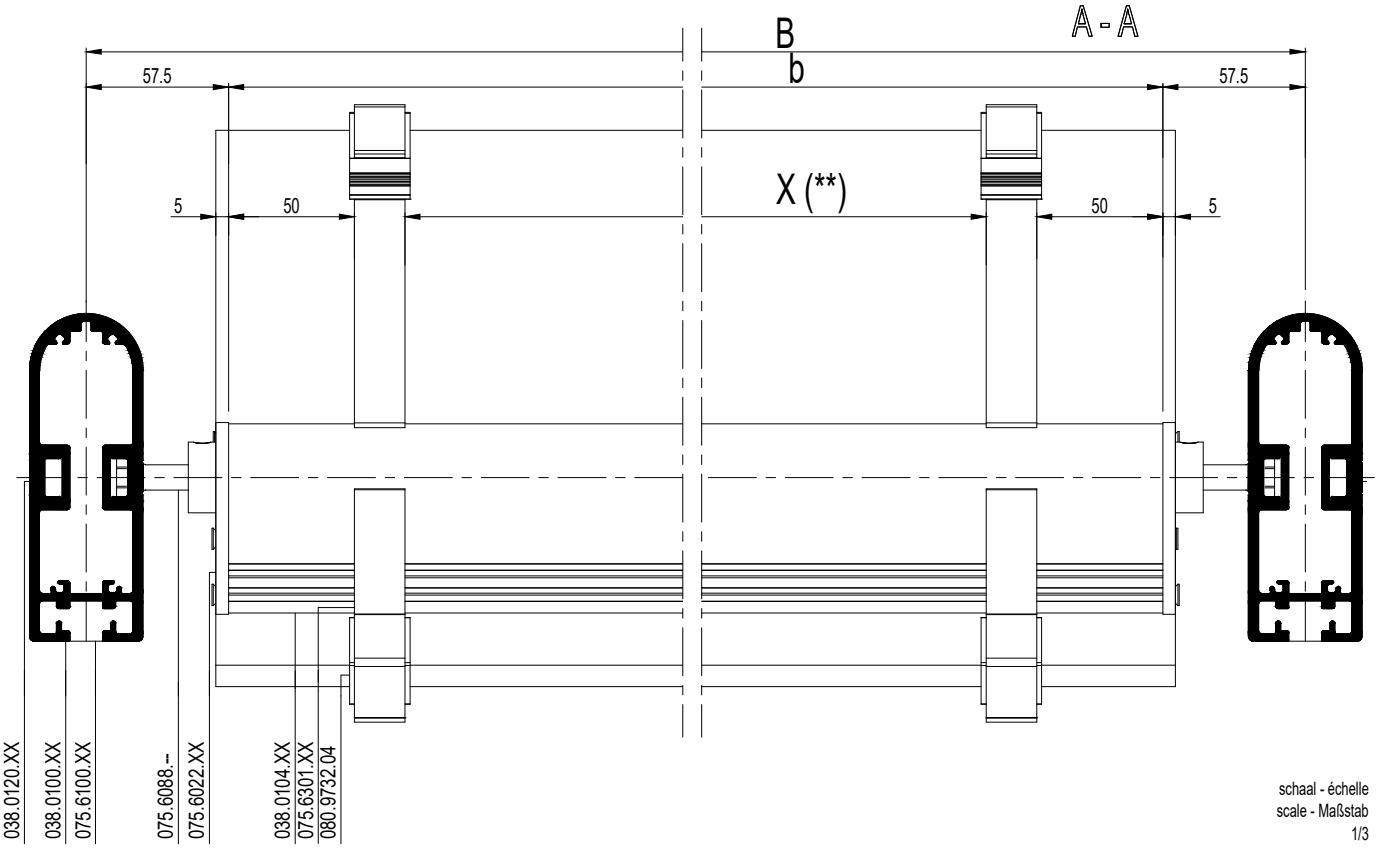

schaal - échelle
scale - Maßstab
1/3

D0067119

E

BS 100

GLASS LOUVRES VAST IN VERTICAAL VLAK
GLASS LOUVRES FIXES DANS UN PLAN VERTICAL
FIXED GLASS LOUVRES IN A VERTICAL PLANE
FESTE GLASS LOUVRES IN EINER VERTIKALE EBENE

LAMELLENHELLING
PENTE DES LAMES
LAMELLA SLOPE
LAMELLENNEIGUNG
0° / 15° / 30° / 45° / 60° / 75° / 90°

AFSTAND / BREEDTE / HOEKINCLINATIE LAMEL
DISTANCE / LARGEUR / INCLINAISON D'ANGLE LAME
DISTANCE / WIDTH / ANGLE INCLINATION LOUVRE
ABSTAND / BREITE / WINKELINKLINATION LAMELLE
56.E....

n = AANTAL LAMELLEN
n = NOMBRE DE LAMES
n = NUMBER OF LOUVRES
n = ANZAHL LAMELLEN

* PER LAMEL
* PAR LAME
* PER LOUVRE
* PER LAMELLE

m = AANTAL GLASHOUDERS / LAMEL
m = NOMBRE DE SUPPORTS DE VITRAGE / LAME
m = NUMBER OF PANEL GRIPS / LOUVRE
m = ANZAHL GLASHALTEPROFILE / LAMEL

		#	
075.6102.XX		4	56.G...
052.5311.--		8	56.G...
075.6088.--		2 *	56.G...
075.6302.XX		4 *	56.G...
075.6027.XX		2 *	56.G...
052.5311.--		4 *	56.G...
075.6297.--		4 *	56.G...
050.5039.--		4 *	56.G...
080.9732.04		4 *	56.G...
051.5271.--		1 *	56.G...

GLASMATEN
DIMENSIONS DES VITRES
GLASS SIZES
GLASMAßE

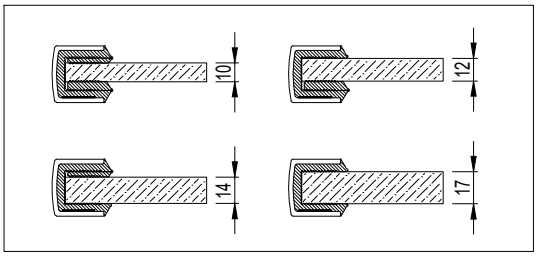

DETAIL A

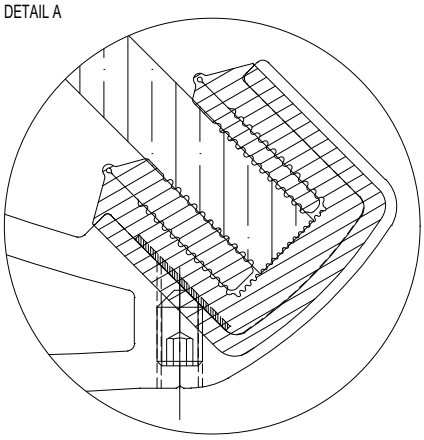

B - B

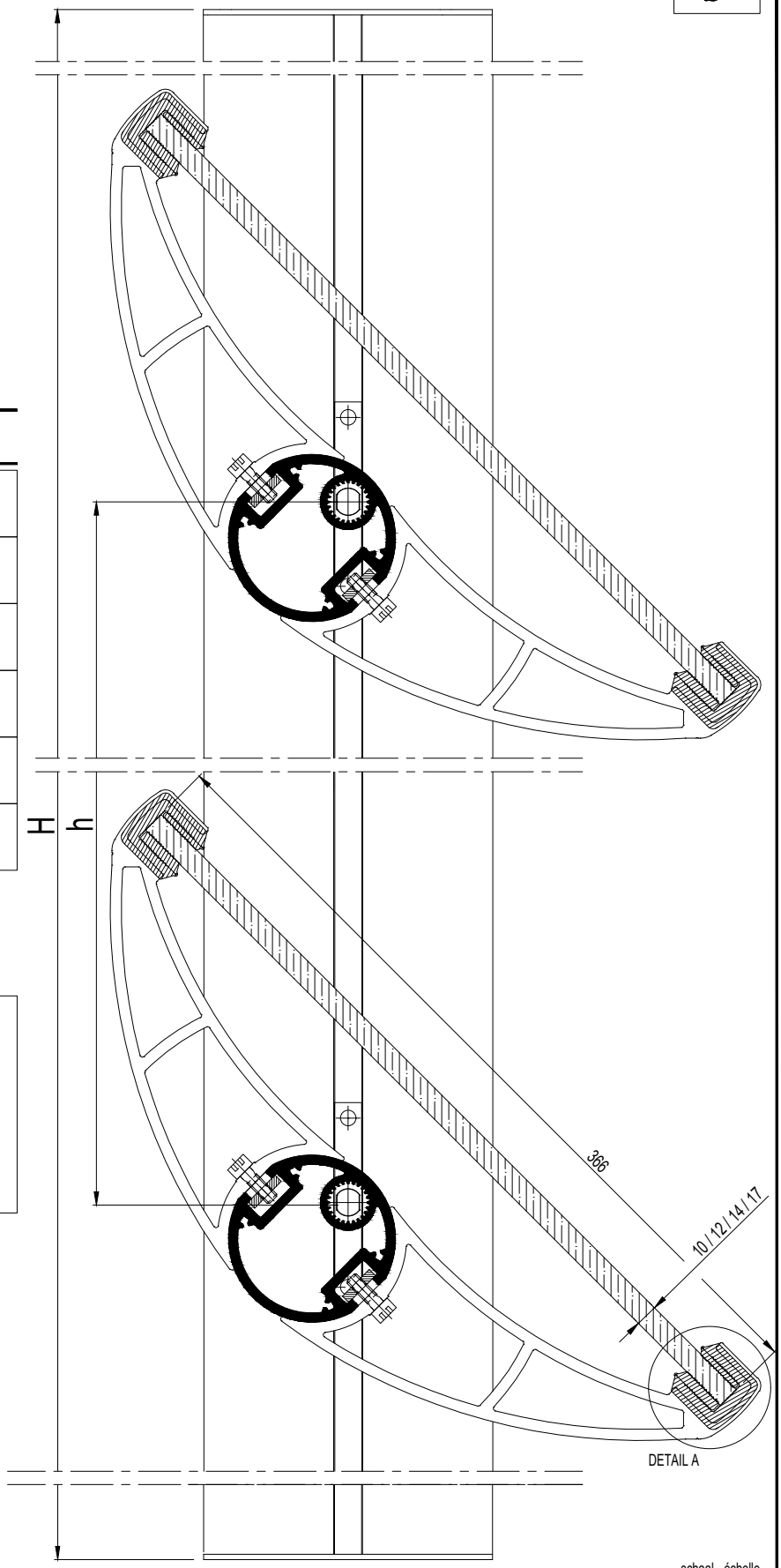

schaal - échelle
scale - Maßstab
1/3

D0067119

E

GLASS LOUVRES VAST IN VERTICAAL VLAK
GLASS LOUVRES FIXES DANS UN PLAN VERTICAL
FIXED GLASS LOUVRES IN A VERTICAL PLANE
FESTE GLASS LOUVRES IN EINER VERTIKALE EBENE

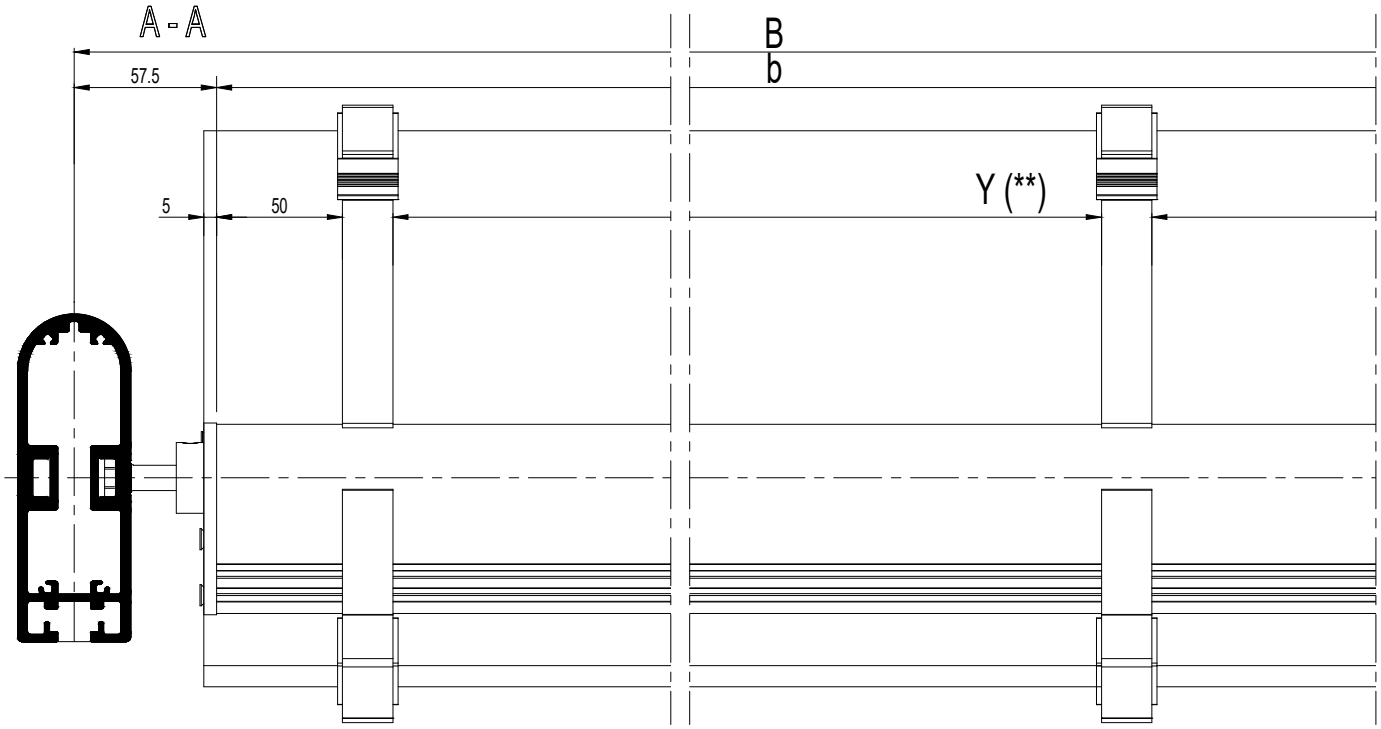

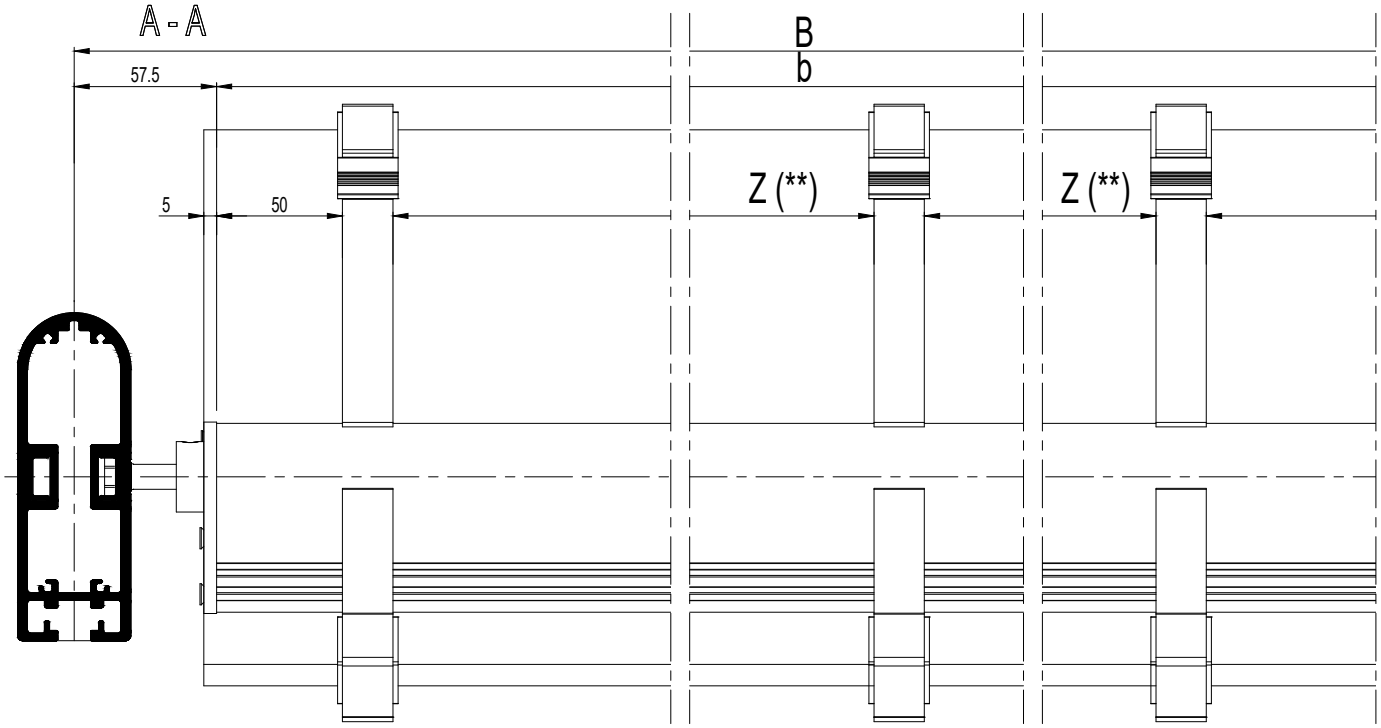

schaal - échelle
scale - Maßstab
1/3

D0068260

BS 100

GLASS LOUVRES VAST IN VERTICAAL VLAK
GLASS LOUVRES FIXES DANS UN PLAN VERTICAL
FIXED GLASS LOUVRES IN A VERTICAL PLANE
FESTE GLASS LOUVRES IN EINER VERTIKALE EBENE

n = AANTAL LAMELLEN
n = NOMBRE DE LAMES
n = NUMBER OF LOUVRES
n = ANZAHL LAMELLEN

* PER LAMEL
* PAR LAME
* PER LOUVRE
* PER LAMELLE

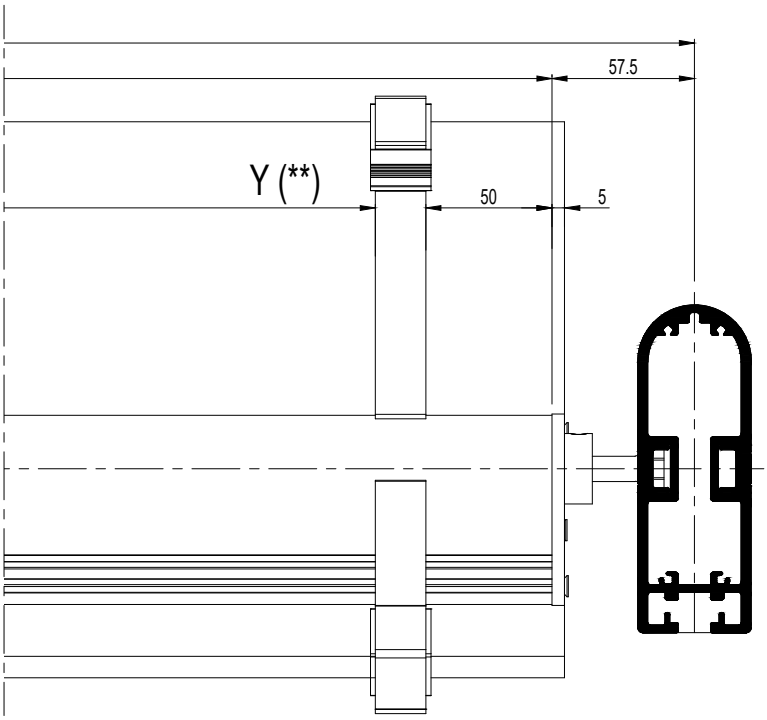

		#	
075.6100.XX		4	56.G...
052.5311.--		8	56.G...
075.6088.--		2 *	56.G...
075.6302.XX		6 *	56.G...
075.6027.XX		2 *	56.G...
052.5311.--		4 *	56.G...
075.6297.--		6 *	56.G...
050.5039.--		6 *	56.G...
080.9732.04		6 *	56.G...
051.5271.--		1 *	56.G...

n = AANTAL LAMELLEN
n = NOMBRE DE LAMES
n = NUMBER OF LOUVRES
n = ANZAHL LAMELLEN

* PER LAMEL
* PAR LAME
* PER LOUVRE
* PER LAMELLE

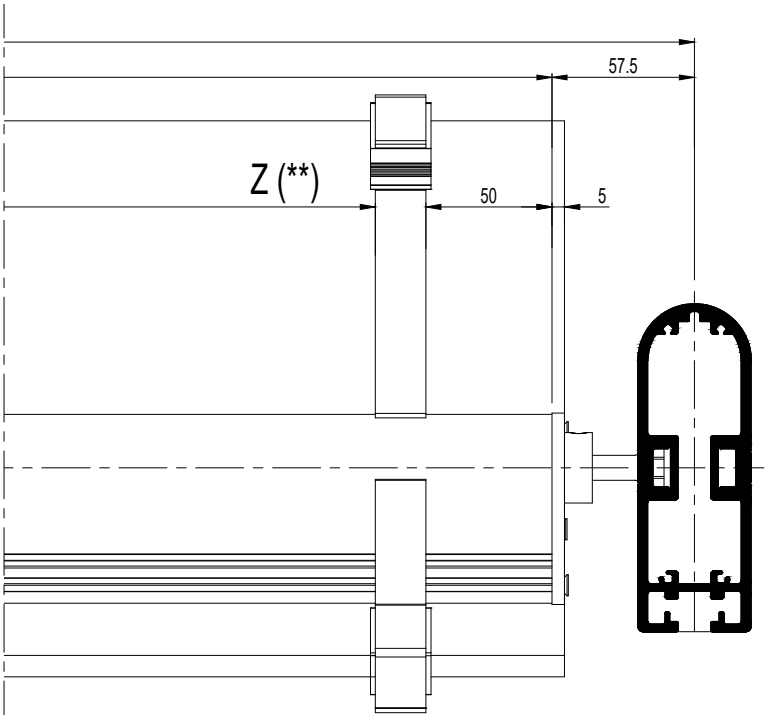

		#	
075.6100.XX		4	56.G...
052.5311.--		8	56.G...
075.6088.--		2 *	56.G...
075.6302.XX		8 *	56.G...
075.6027.XX		2 *	56.G...
052.5311.--		4 *	56.G...
075.6297.--		8 *	56.G...
050.5039.--		8 *	56.G...
080.9732.04		8 *	56.G...
051.5271.--		1 *	56.G...

schaal - échelle
scale - Maßstab
1/3

D0068260

E

AFSTAND / BREEDTE / HOEKINCLINATIE GLASS LOUVRE
DISTANCE / LARGEUR / INCLINAISON D'ANGLE GLASS LOUVRE
DISTANCE / WIDTH / ANGLE INCLINATION GLASS LOUVRE
ABSTAND / BREITE / WINKELINKLINATION GLASS LOUVRE

LAMELLENHELLING PENTE DES LAMES LAMELLA SLOPE LAMELLENNEIGUNG	0°

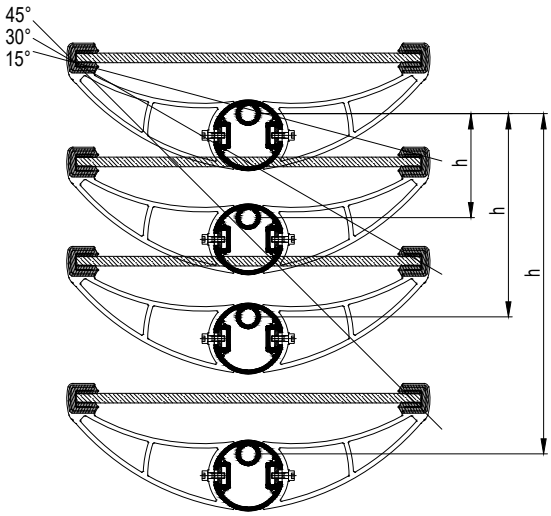

h		
15°	30°	45°
110 mm	215 mm	360 mm

LAMELLENHELLING PENTE DES LAMES LAMELLA SLOPE LAMELLENNEIGUNG	15°

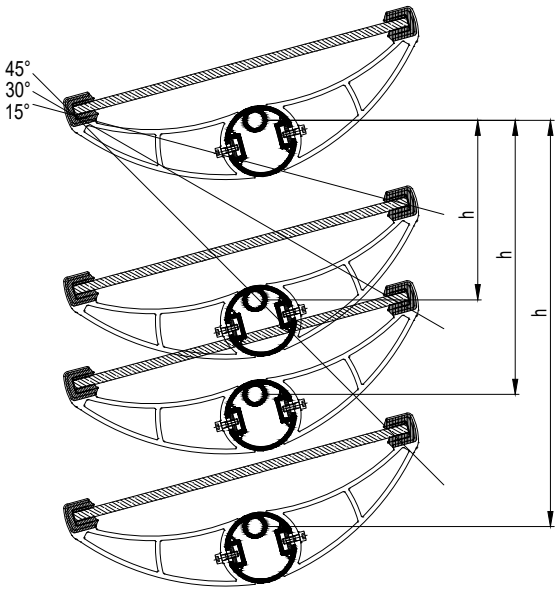

h		
15°	30°	45°
190 mm	290 mm	430 mm

h	LAMELLENAFSTAND DISTANCE DES LAMES LAMELLA DISTANCE LAMELLENABSTAND

D0067254

E

AFSTAND / BREEDTE / HOEKINCLINATIE GLASS LOUVRE
DISTANCE / LARGEUR / INCLINAISON D'ANGLE GLASS LOUVRE
DISTANCE / WIDTH / ANGLE INCLINATION GLASS LOUVRE
ABSTAND / BREITE / WINKELINKLINATION GLASS LOUVRE

LAMELLENHELLING PENTE DES LAMES LAMELLA SLOPE LAMELLENNEIGUNG	30°

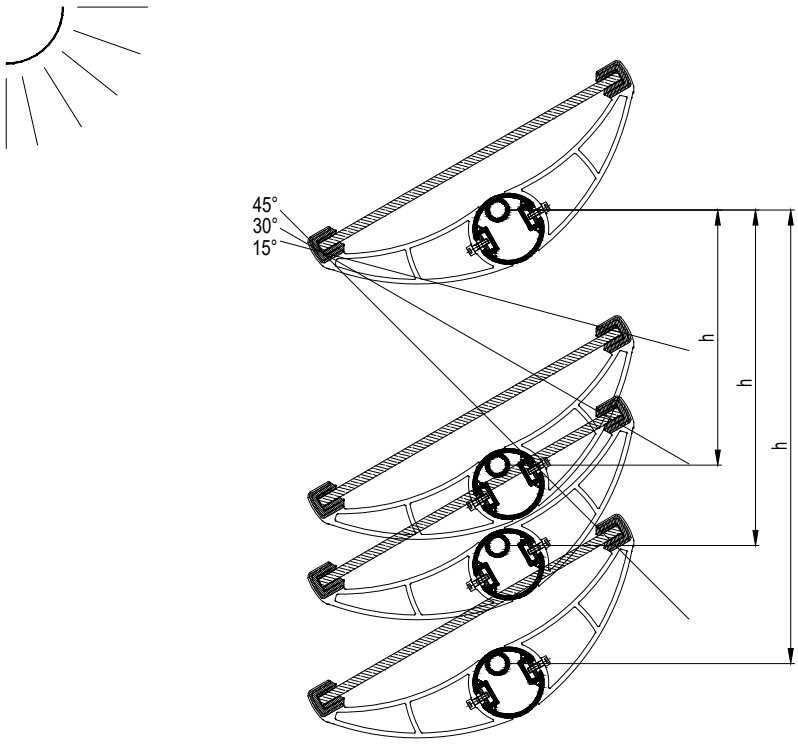

h		
15°	30°	45°
270 mm	355 mm	480 mm

LAMELLENHELLING PENTE DES LAMES LAMELLA SLOPE LAMELLENNEIGUNG	45°

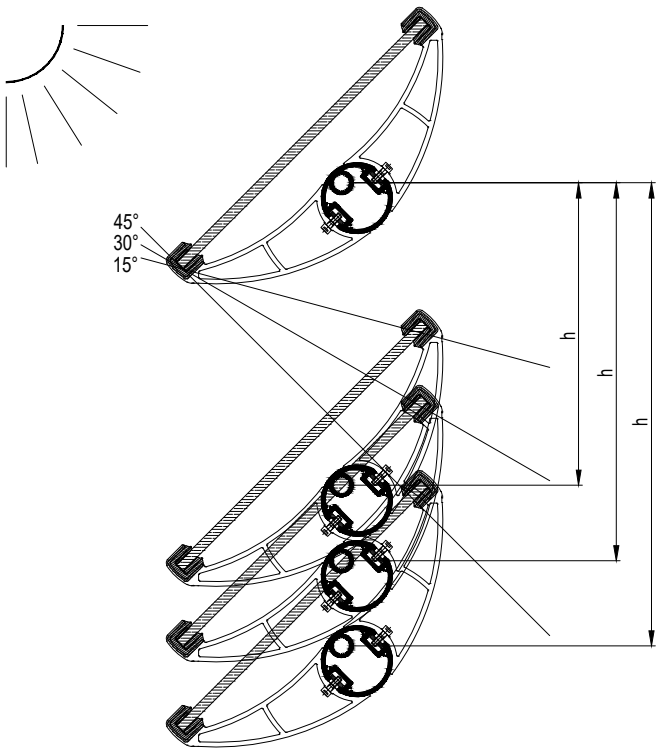

h		
15°	30°	45°
320 mm	400 mm	490 mm

E

D0067254

BS 100

GLASS LOUVRES VAST IN HORIZONTAAL VLAK
GLASS LOUVRES FIXES DANS UN PLAN HORIZONTAL
FIXED GLASS LOUVRES IN A HORIZONTAL PLANE
FESTE GLASS LOUVRES IN EINER HORIZONTALE EBENE

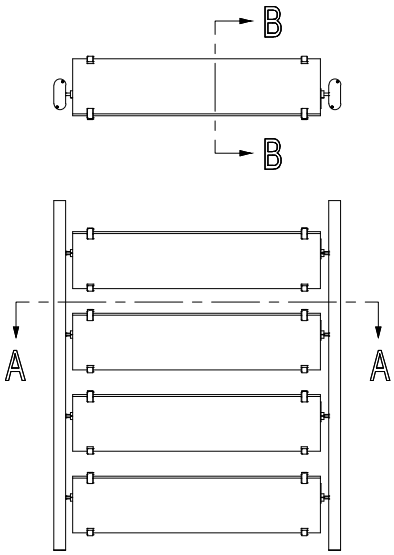

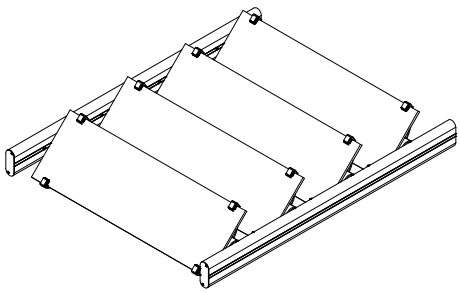

(**) PRESSURE (Pa)	Calculated values (mm)		
800	1450	1400	1350
1200	1340	1200	1180
1600	1260	1000	1050
2000	1200	800	910
2400	1150	667	760
2800	1050	571	650
3200	1020	500	570

MAX. LENGTE GLAS : ZIE GLASLEVERANCIER
LONGUEUR MAX. DE VERRE : VOIR FOURNISSEUR DE VERRE
MAX. LENGTH OF GLASS : SEE GLASS SUPPLIER
MAX. GLASLAENGE : SIEHE GLASLIEFERANT

b = B-101

			#	Lm	
038.0120.XX			2	H - 2.5	56.C...
			(n - 1) x 2	h - 90	
			4	H - 95 - h .(n - 1) / 2	
038.0101.XX			2	H - 2.5	56.C...
038.0104.XX			n	b = B - 111	56.C...
038.0120.XX			4	51.5	56.C...
			(m-1).2	b - 103 - (m.17) / m - 1	

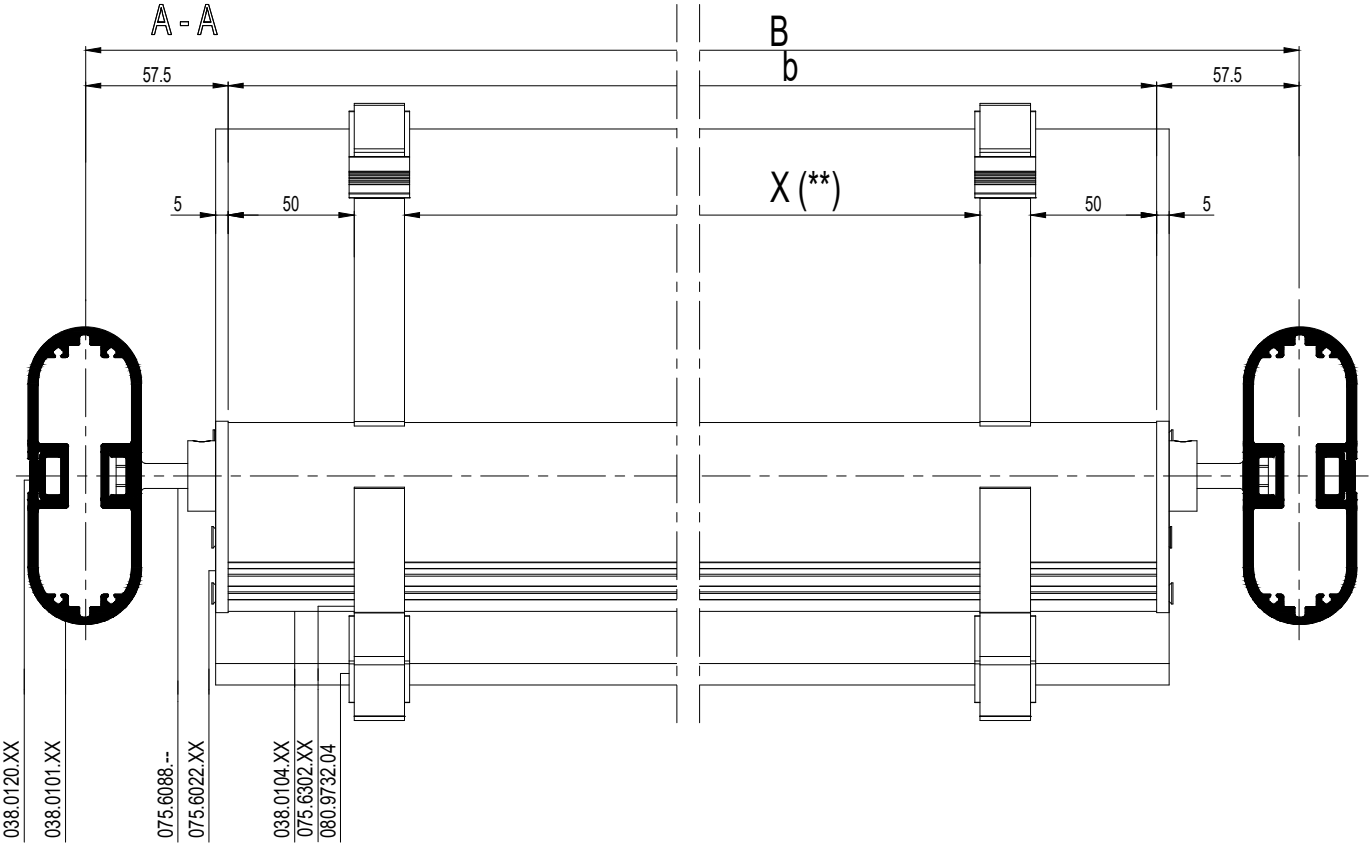

D0067255

E

BS 100

GLASS LOUVRES VAST IN HORIZONTAAL VLAK
GLASS LOUVRES FIXES DANS UN PLAN HORIZONTAL
FIXED GLASS LOUVRES IN A HORIZONTAL PLANE
FESTE GLASS LOUVRES IN EINER HORIZONTALE EBENE

LAMELLENHELLING
PENTE DES LAMES
LAMELLA SLOPE
LAMELLENNEIGUNG
0° / 15° / 30° / 45° / 60° / 75° / 90°

AFSTAND / BREEDTE / HOEKINCLINATIE LAMEL
DISTANCE / LARGEUR / INCLINAISON D'ANGLE LAME
DISTANCE / WIDTH / ANGLE INCLINATION LOUVRE
ABSTAND / BREITE / WINKELINKLINATION LAMELLE
56.E....

n = AANTAL LAMELLEN
n = NOMBRE DE LAMES
n = NUMBER OF LOUVRES
n = ANZAHL LAMELLEN

* PER LAMEL
* PAR LAME
* PER LOUVRE
* PER LAMELLE

m = AANTAL GLASHOUDERS / LAMEL
m = NOMBRE DE SUPPORTS DE VITRAGE / LAME
m = NUMBER OF PANEL GRIPS / LOUVRE
m = ANZAHL GLASHALTEPROFILE / LAMEL

GLASMATEN
DIMENSIONS DES VITRES
GLASS SIZES
GLASMAßE

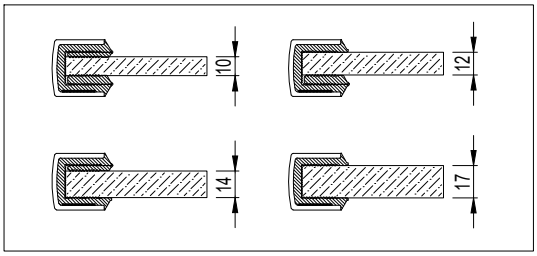

		#	
075.6101.XX		2	56.G...
052.5311.--		4	56.G...
075.6088.--		2 *	56.G...
075.6302.XX		4 *	56.G...
075.6027.XX		2 *	56.G...
052.5311.--		4 *	56.G...
075.6297.--		4 *	56.G...
050.5039.--		4 *	56.G...
080.9732.04		4 *	56.G...
051.5271.--		1 *	56.G...

DETAIL A

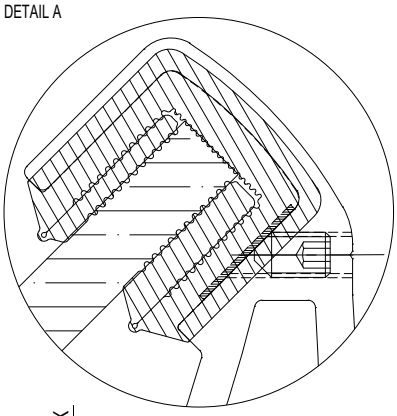

DETAIL A

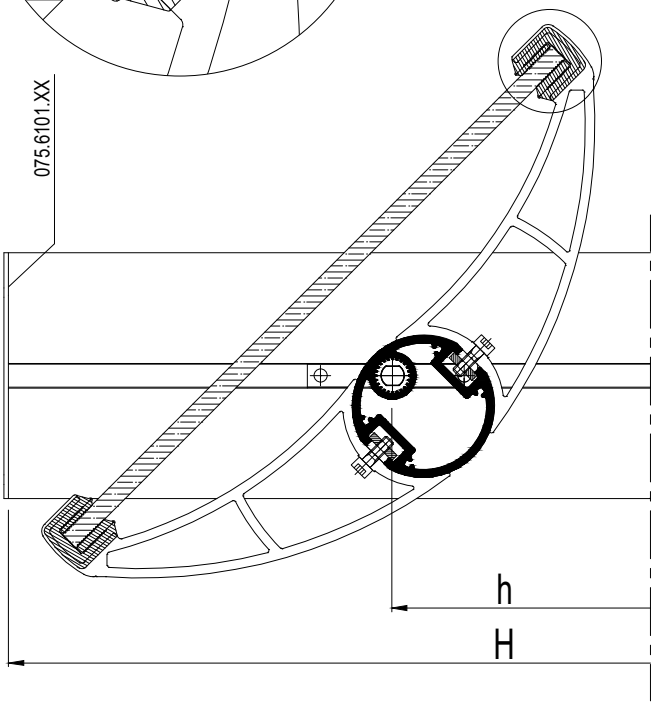

B - B

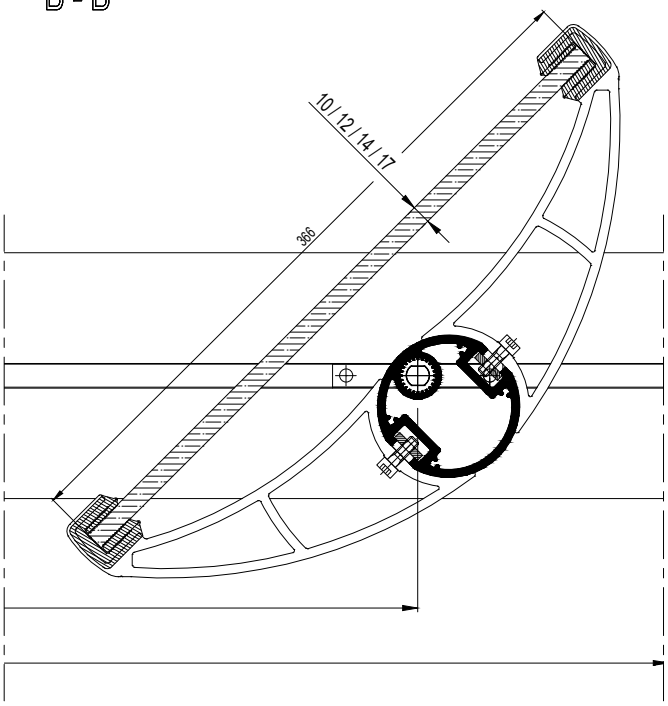

E

D0067255

GLASS LOUVRES VAST IN HORIZONTAAL VLAK
GLASS LOUVRES FIXES DANS UN PLAN HORIZONTAL
FIXED GLASS LOUVRES IN A HORIZONTAL PLANE
FESTE GLASS LOUVRES IN EINER HORIZONTALE EBENE

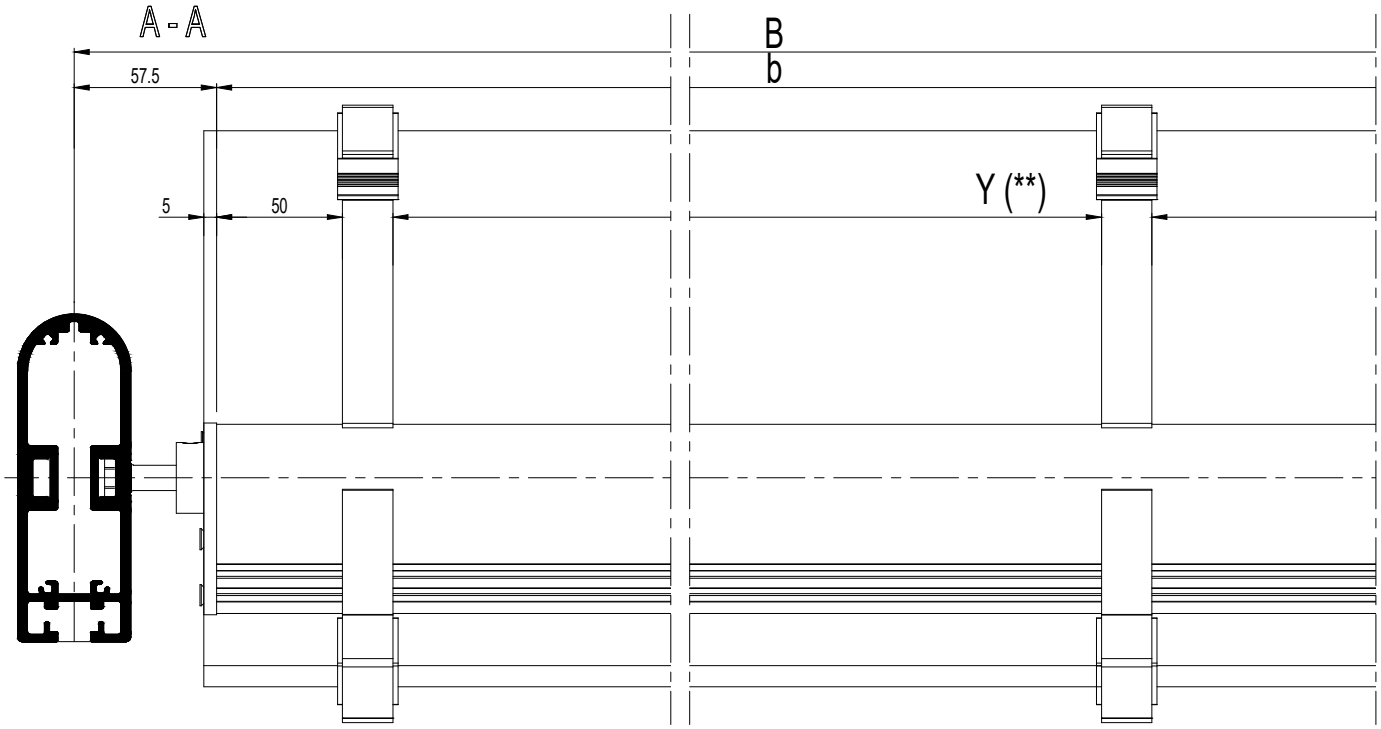

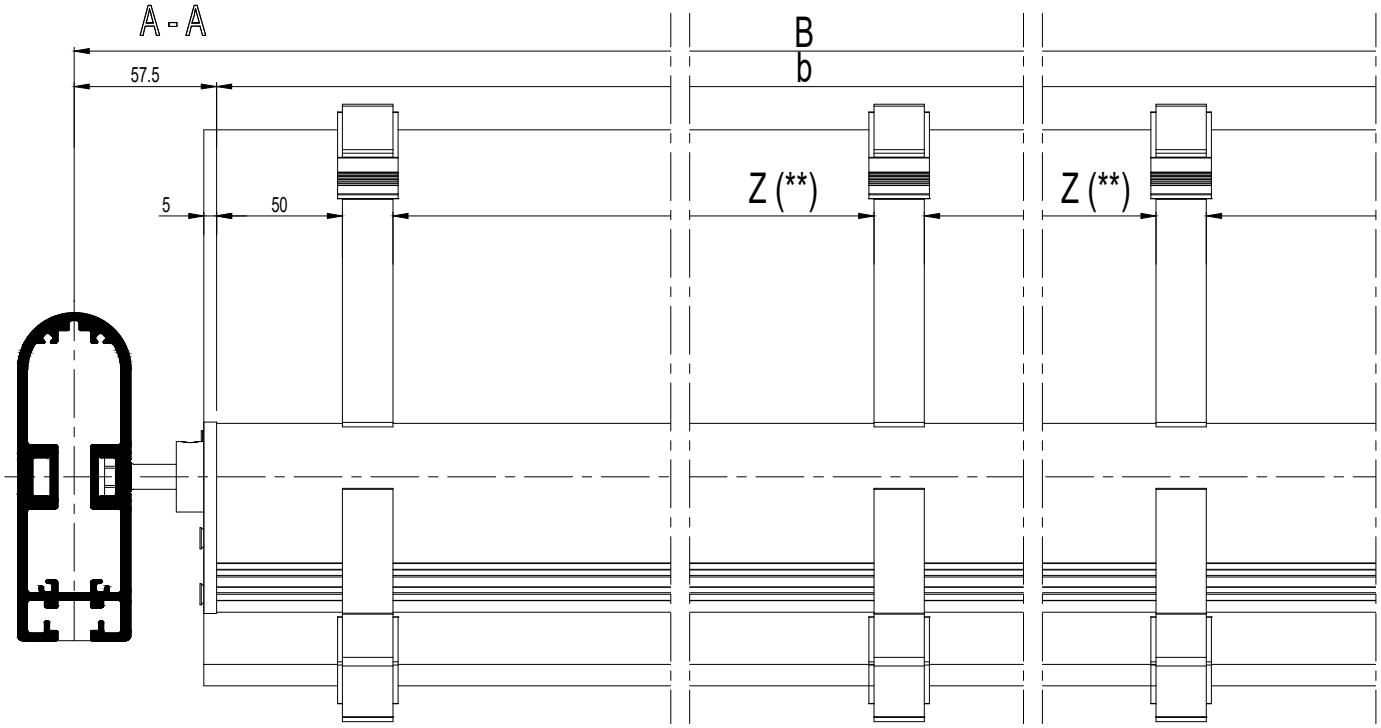

schaal - échelle
scale - Maßstab
1/3

D0068399

BS 100

GLASS LOUVRES VAST IN HORIZONTAAL VLAK
GLASS LOUVRES FIXES DANS UN PLAN HORIZONTAL
FIXED GLASS LOUVRES IN A HORIZONTAL PLANE
FESTE GLASS LOUVRES IN EINER HORIZONTALE EBENE

n = AANTAL LAMELLEN
n = NOMBRE DE LAMES
n = NUMBER OF LOUVRES
n = ANZAHL LAMELLEN

* PER LAMEL
* PAR LAME
* PER LOUVRE
* PER LAMELLE

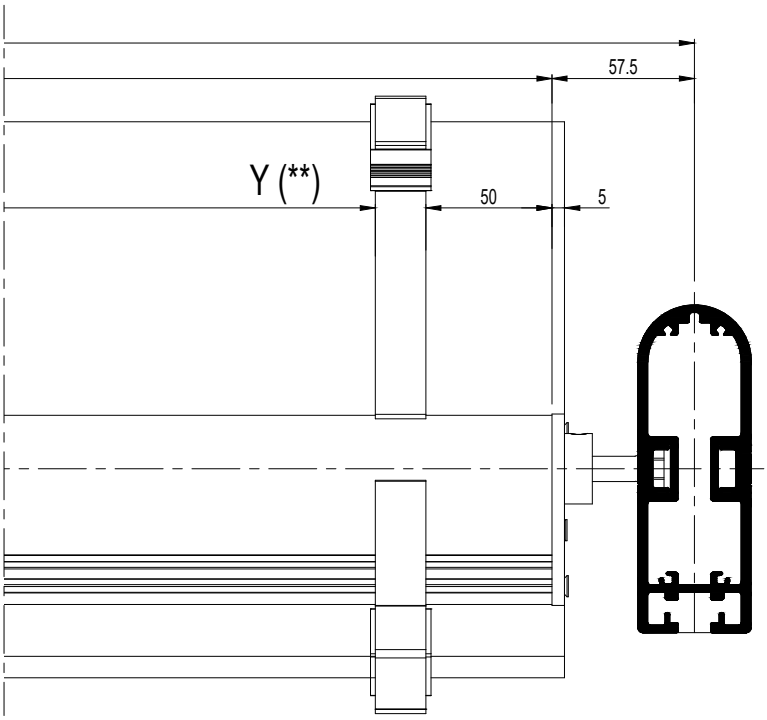

		#	
075.6100.XX		4	56.G...
052.5311.--		8	56.G...
075.6088.--		2 *	56.G...
075.6302.XX		6 *	56.G...
075.6027.XX		2 *	56.G...
052.5311.--		4 *	56.G...
075.6297.--		6 *	56.G...
050.5039.--		6 *	56.G...
080.9732.04		6 *	56.G...
051.5271.--		1 *	56.G...

n = AANTAL LAMELLEN
n = NOMBRE DE LAMES
n = NUMBER OF LOUVRES
n = ANZAHL LAMELLEN

* PER LAMEL
* PAR LAME
* PER LOUVRE
* PER LAMELLE

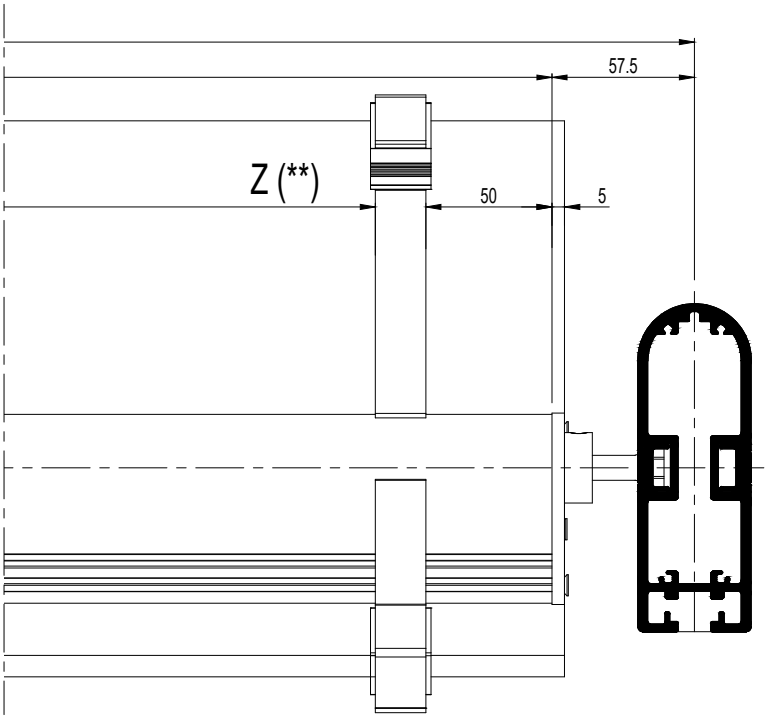

		#	
075.6100.XX		4	56.G...
052.5311.--		8	56.G...
075.6088.--		2 *	56.G...
075.6302.XX		8 *	56.G...
075.6027.XX		2 *	56.G...
052.5311.--		4 *	56.G...
075.6297.--		8 *	56.G...
050.5039.--		8 *	56.G...
080.9732.04		8 *	56.G...
051.5271.--		1 *	56.G...

schaal - échelle
scale - Maßstab
1/3

D0068399

E

AFSTAND / BREEDTE / HOEKINCLINATIE GLASS LOUVRE
DISTANCE / LARGEUR / INCLINAISON D'ANGLE GLASS LOUVRE
DISTANCE / WIDTH / ANGLE INCLINATION GLASS LOUVRE
ABSTAND / BREITE / WINKELINKLINATION GLASS LOUVRE

LAMELLENHELLING
PENTE DES LAMES
LAMELLA SLOPE
LAMELLENNEIGUNG
0°

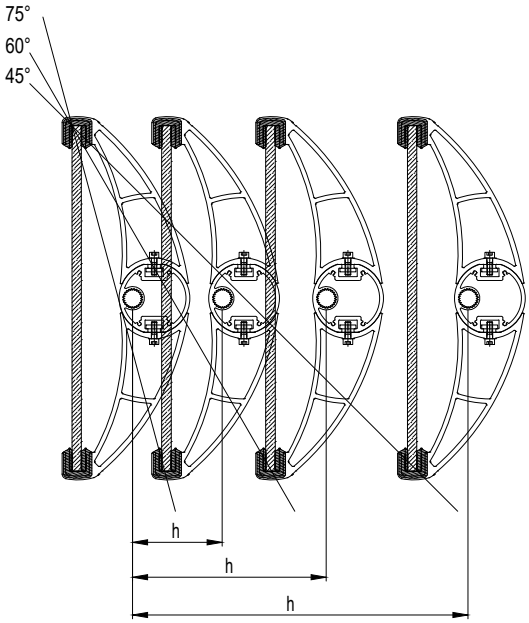

h		
45°	60°	75°
355 mm	205 mm	95 mm

LAMELLENHELLING
PENTE DES LAMES
LAMELLA SLOPE
LAMELLENNEIGUNG
15°

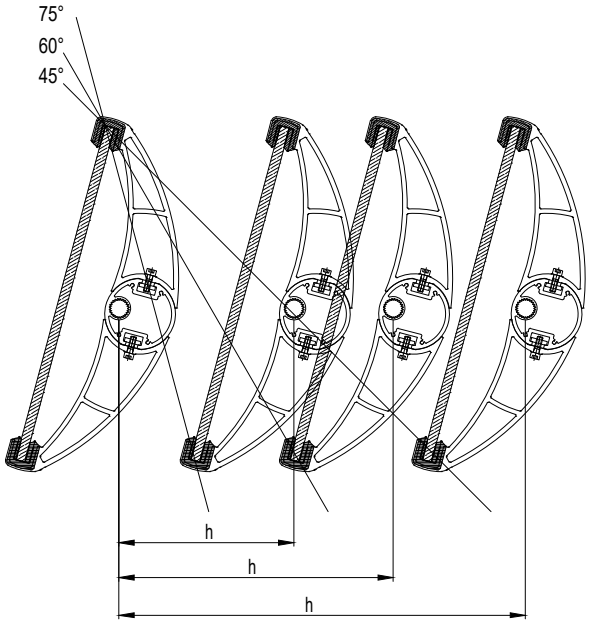

h		
45°	60°	75°
430 mm	290 mm	185 mm

h
LAMELLENAFSTAND
DISTANCE DES LAMES
LAMELLA DISTANCE
LAMELLENABSTAND

D0067284

E

AFSTAND / BREEDTE / HOEKINCLINATIE GLASS LOUVRE
DISTANCE / LARGEUR / INCLINAISON D'ANGLE GLASS LOUVRE
DISTANCE / WIDTH / ANGLE INCLINATION GLASS LOUVRE
ABSTAND / BREITE / WINKELINKLINATION GLASS LOUVRE

LAMELLENHELLING
PENTE DES LAMES
LAMELLA SLOPE
LAMELLENNEIGUNG
30°

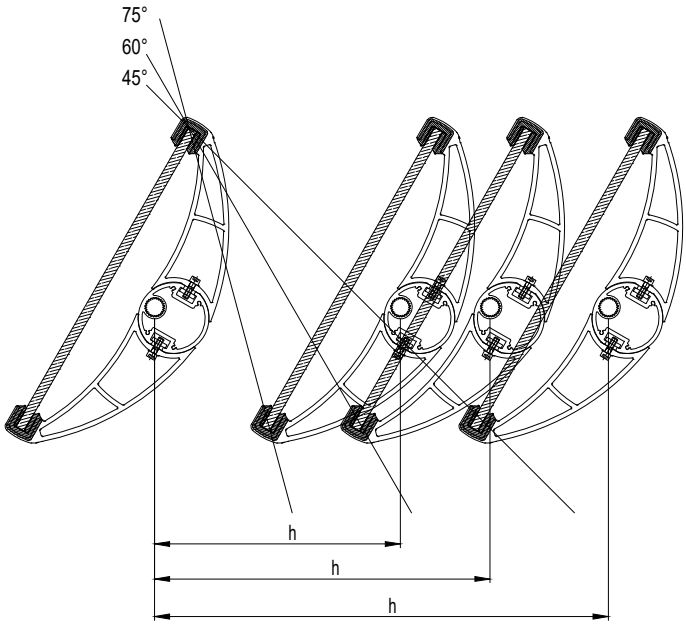

h		
45°	60°	75°
480 mm	355 mm	260 mm

LAMELLENHELLING
PENTE DAS LAMES
LAMELLA SLOPE
LAMELLENNEIGUNG
45°

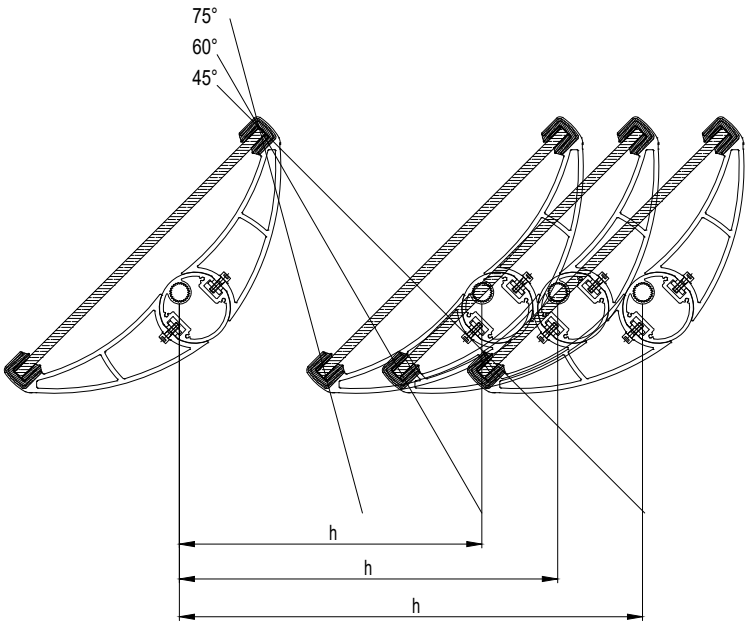

h		
45°	60°	75°
490 mm	400 mm	320 mm

E

D0067284

DETAIL MOTORAANSTURING GLASS LOUVRES
DETAIL COMMANDE MOTEUR GLASS LOUVRES
DETAIL MOTOR DRIVE GLASS LOUVRES
DETAIL MOTORSTEUERUNG GLASS LOUVRES

BINNENAANZICHT
VUE INTERIEURE
INSIDE VIEW
INNENSICHT

LAMELLENHELLING
PENTE DES LAMES
LAMELLA SLOPE
LAMELLENNEIGUNG
VARIABEL

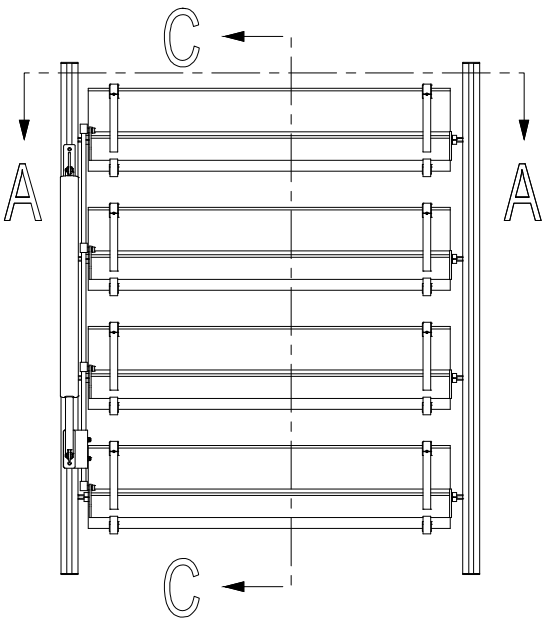

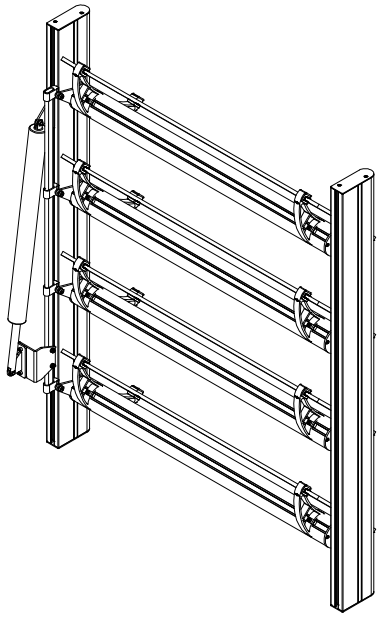

A - A

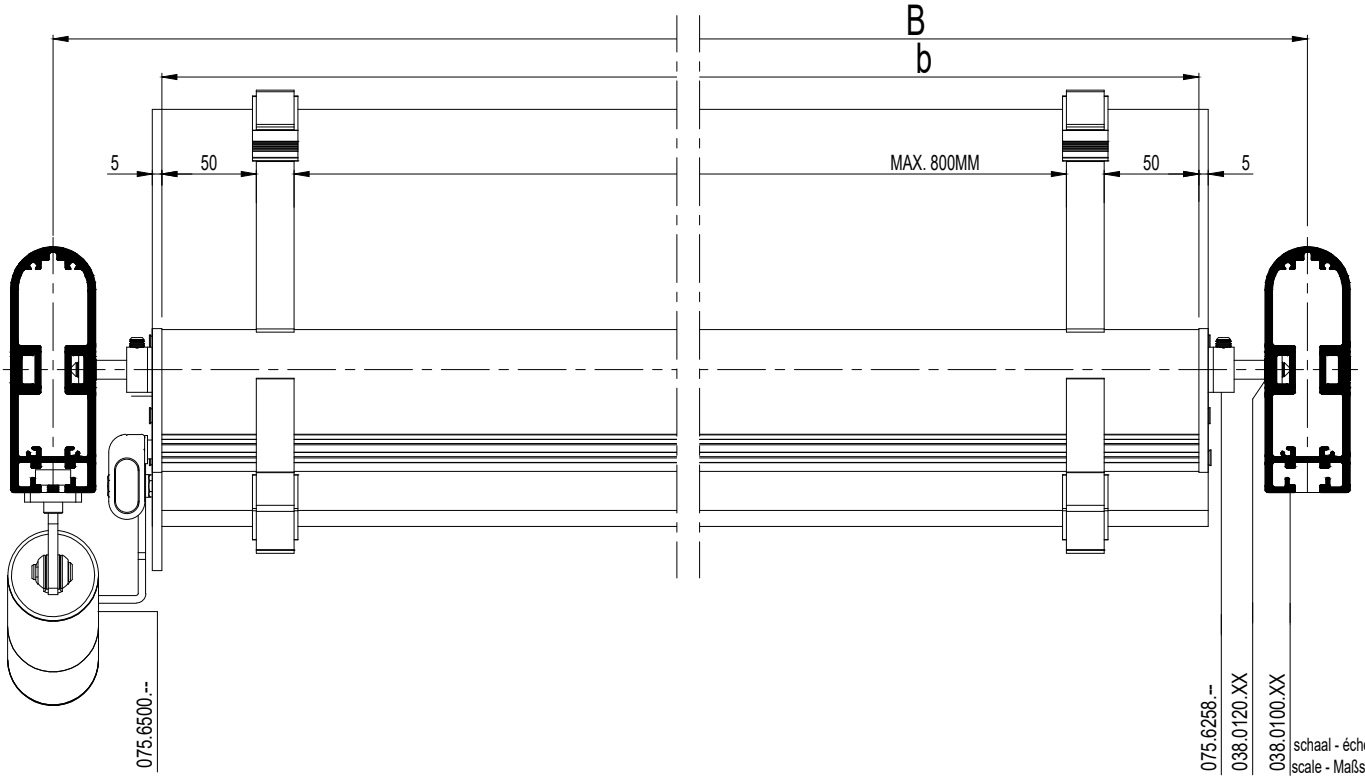

schaal - échelle
scale - Maßstab
1/4

D0067314

E

DETAIL MOTORAANSTURING GLASS LOUVRES
DETAIL COMMANDE MOTEUR GLASS LOUVRES
DETAIL MOTOR DRIVE GLASS LOUVRES
DETAIL MOTORSTEUERUNG GLASS LOUVRES

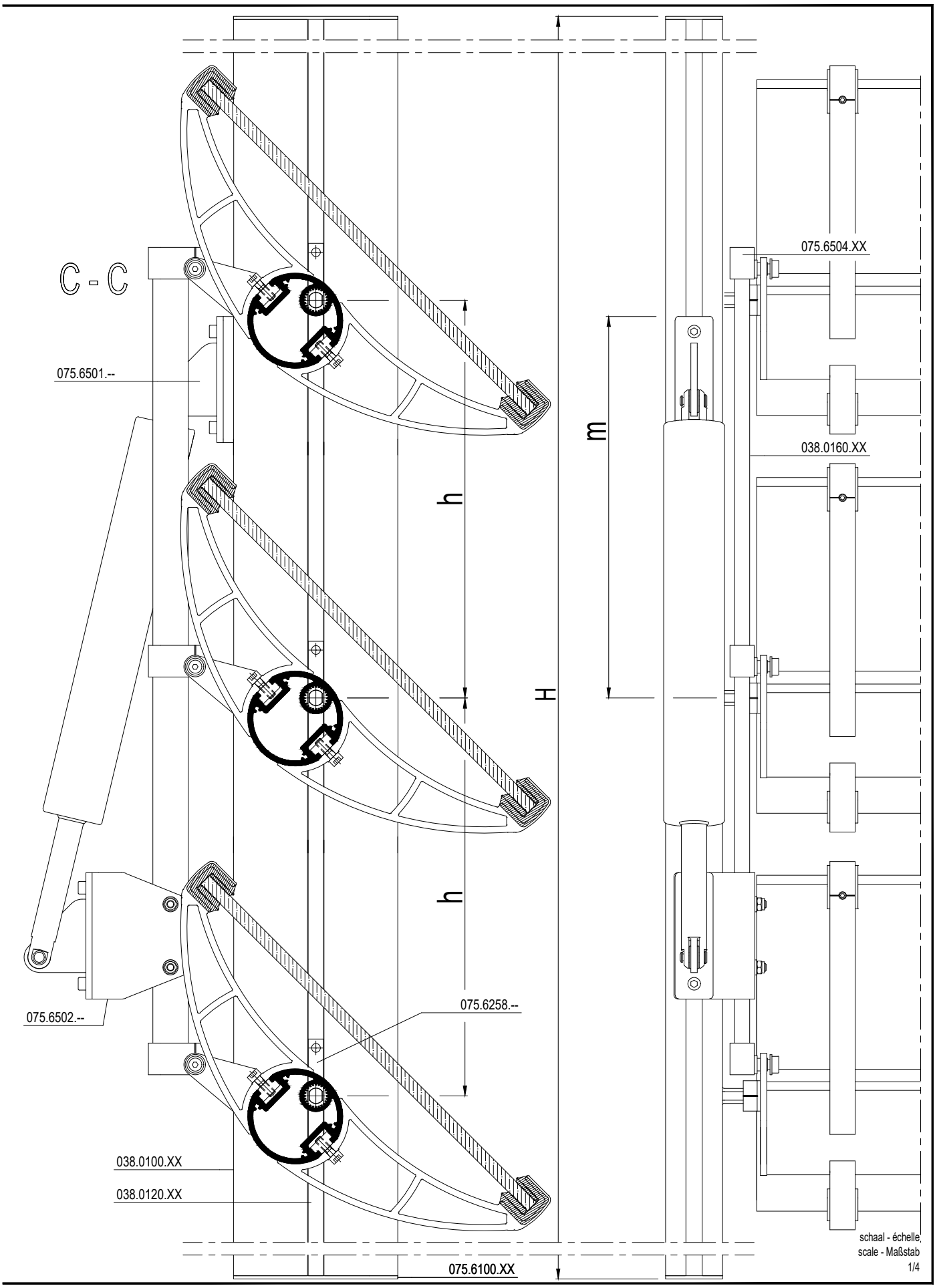

OVERZICHT GLASS LOUVRES BEWEEGBAAR
APERCU GLASS LOUVRES MOBILES
OVERVIEW MOVEABLE GLASS LOUVRES
UEBERSICHT BEWEGLICHE GLASS LOUVRES

D0067703

OVERZICHT GLASS LOUVRES BEWEEGBAAR
APERCU GLASS LOUVRES MOBILES
OVERVIEW MOVEABLE GLASS LOUVRES
UEBERSICHT BEWEGLICHE GLASS LOUVRES

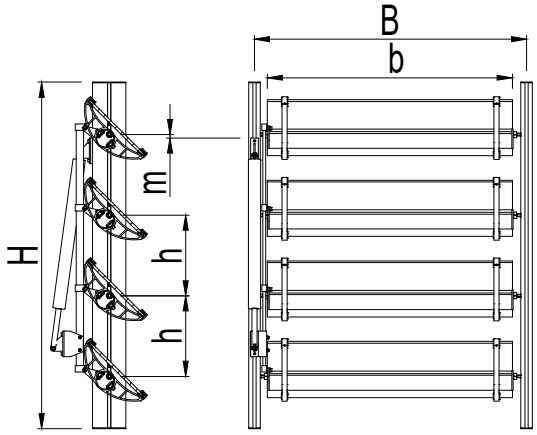

n = AANTAL LAMELLEN
n = NOMBRE DE LAMES
n = NUMBER OF LOUVRES
n = ANZAHL LAMELLEN

(*) : BIJ MINIMUM SLAG VAN MOTOR
(*) : A COURSE MINIMAL DU MOTEUR
(*) : AT MINIMUM STROKE OF MOTOR
(*) : AM MINIMUM SCHLAG MOTOR

		#	Lm	
038.0120.XX		2	H - 5	56.C...
		(n - 1) . 2	h - 90	
		4	(H - 95 - h .(n - 1)) / 2	
038.0100.XX		2	H - 5	56.C...
038.0104.XX		n	B - 111	56.C...
038.0160.XX		1	(n - 1) . h + 25	56.C...
038.0120.XX		4	51.5	56.C...
		(m-1).2	(b - 103 - (m.20)) / (m - 1)	

	#	
075.6100.XX	4	56.G....
052.5311.--	8	56.G...
075.6258.--	2 * n	56.G...
075.6027.XX	n	56.G...
052.5311.--	4 * n	56.G...
075.6077.XX	n	56.G...
052.5311.--	4 * n	56.G...
075.6302.XX	4 *	56.G...
075.6297.--	4 *	56.G...
050.5039.--	4 *	56.G...
080.9732.04	4 *	56.G...
051.5271.--	1 *	56.G...
075.6504.XX	n	56.G...
075.6501.--	2	56.G...
075.6502.--	1	56.G...
075.6500--	1	56.G...

E

D0067703

F

REYNAERS
aluminium

Montagetekeningen
Fabrication et montage
Assembly drawings
Montagezeichnungen

EINDSTUK VOOR LAMELLEN TUSSEN DRAAGARMEN
PIECE FINALE POUR LAMES ENTRES BRAS-SUPPORT
END PIECE FOR LOUVRE BETWEEN SUPPORTING ARMS
ENDSTUECK FUER LAMELLEN ZWISCHEN TRAGARMEN

LAMEL LAME LOUVRE LAMELLE	EINDSTUK VASTE LAMELLEN PIECE FINALE LAMES FIXES END PIECE FIXED LOUVRES ENDSTUECK FESTE LAMELLEN
038.1000.XX	2x 075.6020.XX
038.1001.XX	2x 075.6021.XX
038.1002.XX	2x 075.6022.XX
038.1003.XX	2x 075.6023.XX
038.1004.XX	2x 075.6024.XX
038.1005.XX	2x 075.6025.XX
038.1006.XX	2x 075.6026.XX

EINDSTUK VOOR LAMELLEN TUSSEN DRAAGARMEN
PIECE FINALE POUR LAMES ENTRES BRAS-SUPPORT
END PIECE FOR LOUVRE BETWEEN SUPPORTING ARMS
ENDSTUECK FUER LAMELLEN ZWISCHEN TRAGARMEN

LAMEL LAME LOUVRE LAMELLE	EINDSTUK BEWEEGBARE LAMELLEN PIECE FINALE LAMES MOBILES END PIECE MOVEABLE LOUVRES ENDSTUECK BEWEGLICHE LAMELLEN			MOTOR MOTEUR MOTOR ANTRIEB
038.1000.XX	075.6020.XX	+	075.6070.XX	075.6499.--
038.1001.XX	075.6021.XX	+	075.6071.XX	075.6499.--
038.1002.XX	075.6022.XX	+	075.6072.XX	075.6499.--
038.1003.XX	075.6023.XX	+	075.6073.XX	075.6499.--
038.1004.XX	075.6024.XX	+	075.6074.XX	075.6500.--
038.1005.XX	075.6025.XX	+	075.6075.XX	075.6500.--
038.1006.XX	075.6026.XX	+	075.6076.XX	075.6500.--

D0061215

F

EINDSTUK VOOR LAMELLEN PROJECTOPLOSSING
PIECE FINALE POUR LAMES SOLUTION PROJET
END PIECE FOR LOUVRE PROJECT SOLUTION
ENDSTUECK FUER LAMELLEN PROJEKTLÖSUNG

LAMEL LAME LOUVRE LAMELLE	EINDSTUK BEWEEGBARE LAMELLEN PIECE FINALE LAMES MOBILES END PIECE MOVEABLE LOUVRES ENDSTUECK BEWEGLICHE LAMELLEN	MOTOR MOTEUR MOTOR ANTRIEB
038.1000.XX	075.5920.XX + 075.5970.XX	075.6499.--
038.1001.XX	075.5921.XX + 075.5971.XX	075.6499.--
038.1002.XX	075.5922.XX + 075.5972.XX	075.6499.--
038.1003.XX	075.5923.XX + 075.5973.XX	075.6499.--
038.1004.XX	075.5924.XX + 075.5974.XX	075.6500.--
038.1005.XX	075.5925.XX + 075.5975.XX	075.6500.--
038.1006.XX	075.5926.XX + 075.5976.XX	075.6500.--

EINDSTUK VOOR LAMELLEN IN LAMELHOUDER
PIECE FINALE POUR LAMES DANS PORTE LAMES
END PIECE FOR LOUVRE IN LOUVRE HOLDER
ENDSTUECK FESTE LAMELLEN

LAMEL LAME LOUVRE LAMELLE	EINDSTUK VASTE LAMELLEN PIECE FINALE LAMES FIXES END PIECE FIXED LOUVRES ENDSTUECK FUER LAMELLEN IN LAMELLENHALTER
038.1003.XX	075.6033.XX
038.1004.XX	075.6034.XX
038.1005.XX	075.6035.XX

F

D0061215

GEVELANKER
ANCRAGE MUR-RIDEAU
BRACKET CURTAIN WALL
FASSADEANKER

* Max. moment in kNmm

075.6163.XX	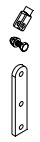	075.6161.XX	
075.6211.XX	 133 *	075.6213.XX	 200 *
075.6200.XX	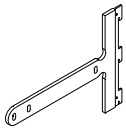 320 *	075.6201.XX	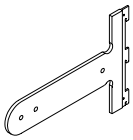 320 *
075.6202.XX	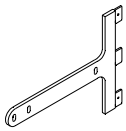 260 *	075.6203.XX	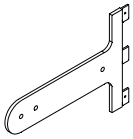 260 *

MUURBEVESTIGING
FIXATION MURALE
WALL BRACHETS
MAUERBEFESTIGUNG

075.6215.XX	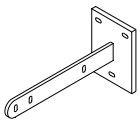 600 *	075.6216.XX	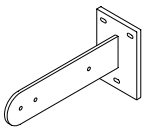 1200 *
075.6217.XX	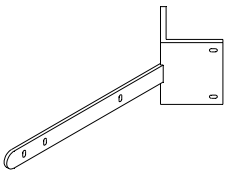 600 *	075.6218.XX	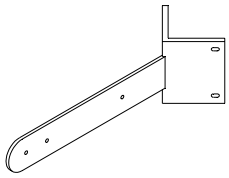 1200 *
075.6170.XX		075.6171.XX	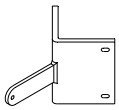

Opmerking : Looprooster, draadstang, muurankers steeds laten berekenen door officiële structureel ingenieur.
Alle bouten (horizontaal + verticaal) steeds borgen!

Remarque : Il faut faire calculer le caillebotis, la barre filetée et l'ancrage mural par un ingénieur structurel officiel
Toutes les vis (horizontal et vertical) doivent être bloquées !

Remark : One should have calculated the walkway, the threaded rod and the wall anchoring by an official structural engineer
All bolts (horizontal and vertical) must be locked !

Anmerkung : Die Laufroste, die Gewindestange sowie das Maueranker sollen von einem officiziellen strukturellen Ingenieur berechnet werden
Alle Bolzen (waagerecht und senkrecht) sollen gesichert werden !

D0061222

F

Zonder steunstangen 1500mm.
Met steunstangen 2000mm.

Without support rods 1500mm
With support rods 2000mm

Sans barres de support 1500mm.
Avec barres de support 2000mm.

Ohne Stützstangen 1500mm.
Mit Stützstangen 2000mm

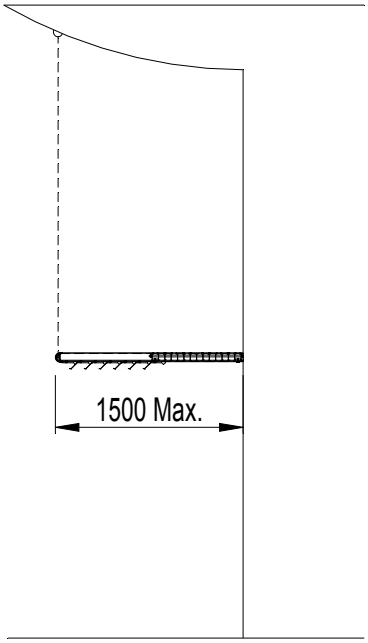

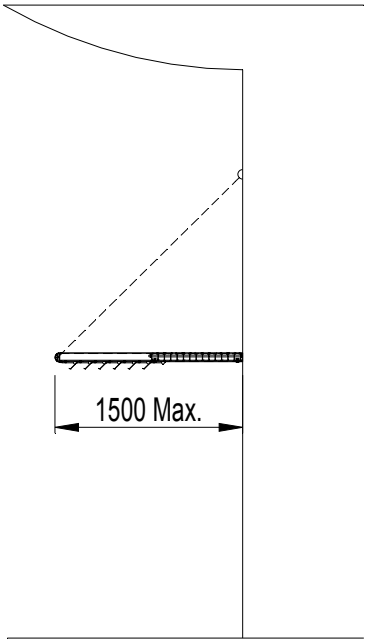

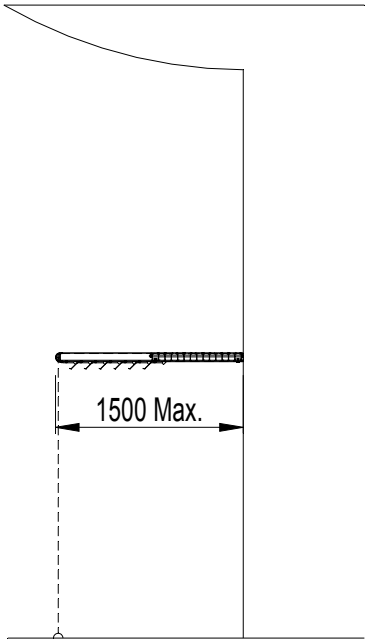

Algemene opmerking :

Elke typische situatie en specifiek project dient door een officiële stuctureel ingenieur berekend/bekrachtigd te worden.

General remark :

Every typical situation and specific project has to be calculated / validated by an official structural engineer.

Remarque générale :

Chaque situation typique et projet spécifique doit être calculé/validé par un ingénieur structurel officiel.

Allgemeine Anmerkung :

Jede typische Situation und spezifisches Projekt soll von einem offiziellen strukturellen Ingenieur berechnet bekräftigt werden.

Aanbeveling :

Afmetingen looprooster : Min. 650mm / Max. 1500mm
Wij bevelen plaatsingssteunen aan (boven 1500mm)
Onderworpen aan berekening met steunstangen (tot 2000mm)

General remark :

Walkway width : Min. 650mm / Max. 1500mm
We recommend putting supports! (above 1500mm)
Subject to calculations with support rods (to 2000mm)

Remarque générale :

Largeur du caillebotis : Min. 650mm - Max. 1500mm
Nous recommandons des supports
de montage (au-dessus de 1500mm)
Sujet aux calculs avec barres de support (jusqu'à 2000mm)

Allgemeine Anmerkung :

Breite des Laufrost : Min. 650mm - Max. 1500mm
Wir empfehlen die Anwendung von
Montagestützen (höher als 1500mm)
Berechnung mit Stützstangen (bis 2000mm)

MONTAGE VASTE LAMELLEN VERTICAAL
MONTAGE LAMES FIXES VERTICALEMENT
ASSEMBLY FIXED LOUVRES VERTICALLY
MONTAGE FESTE LAMELLEN VERTIKAL

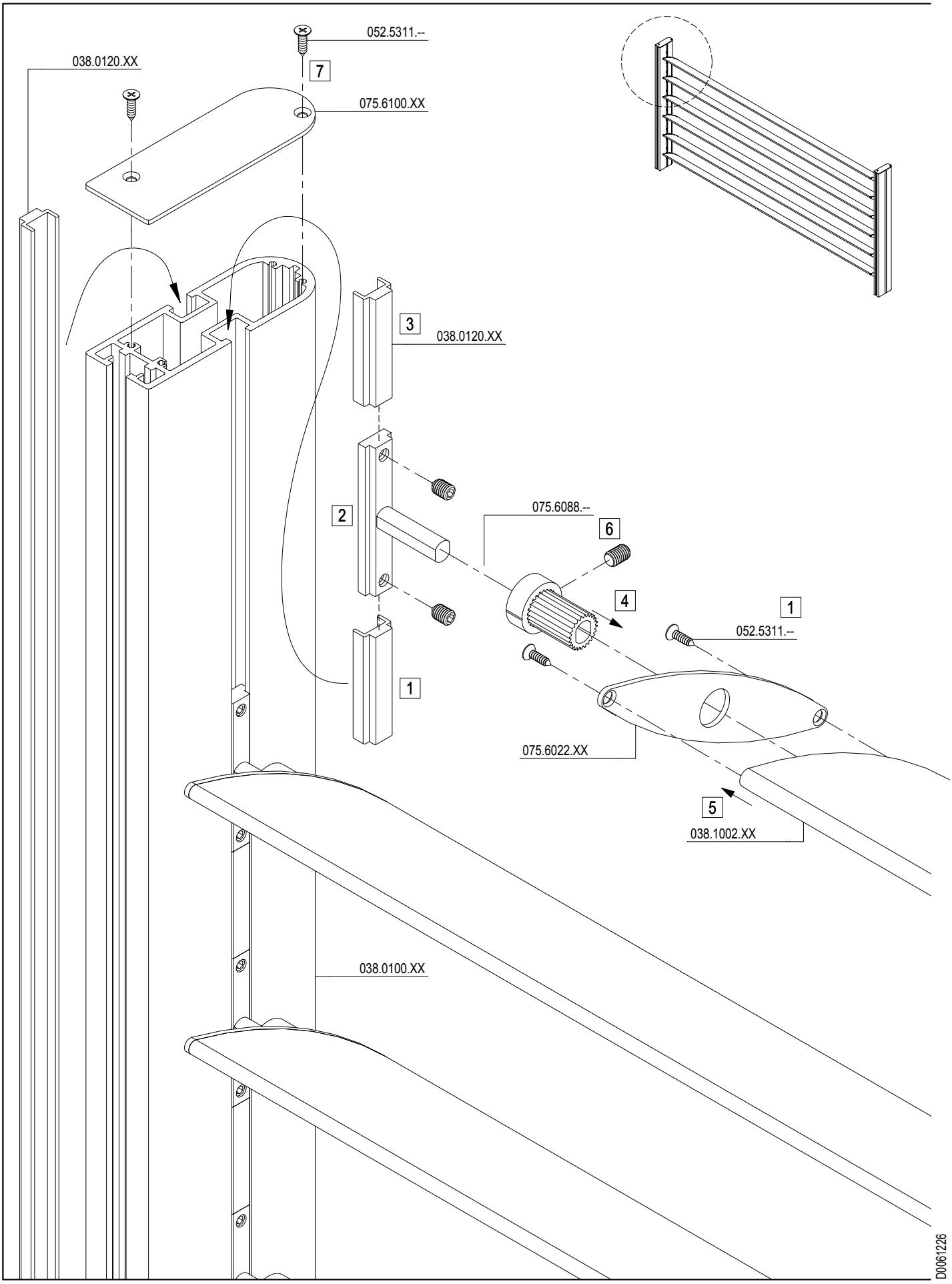

MONTAGE VASTE LAMELLEN VERTICAAL
MONTAGE LAMES FIXES VERTICALEMENT
ASSEMBLY FIXED LOUVRES VERTICALLY
MONTAGE FESTE LAMELLEN VERTIKAL

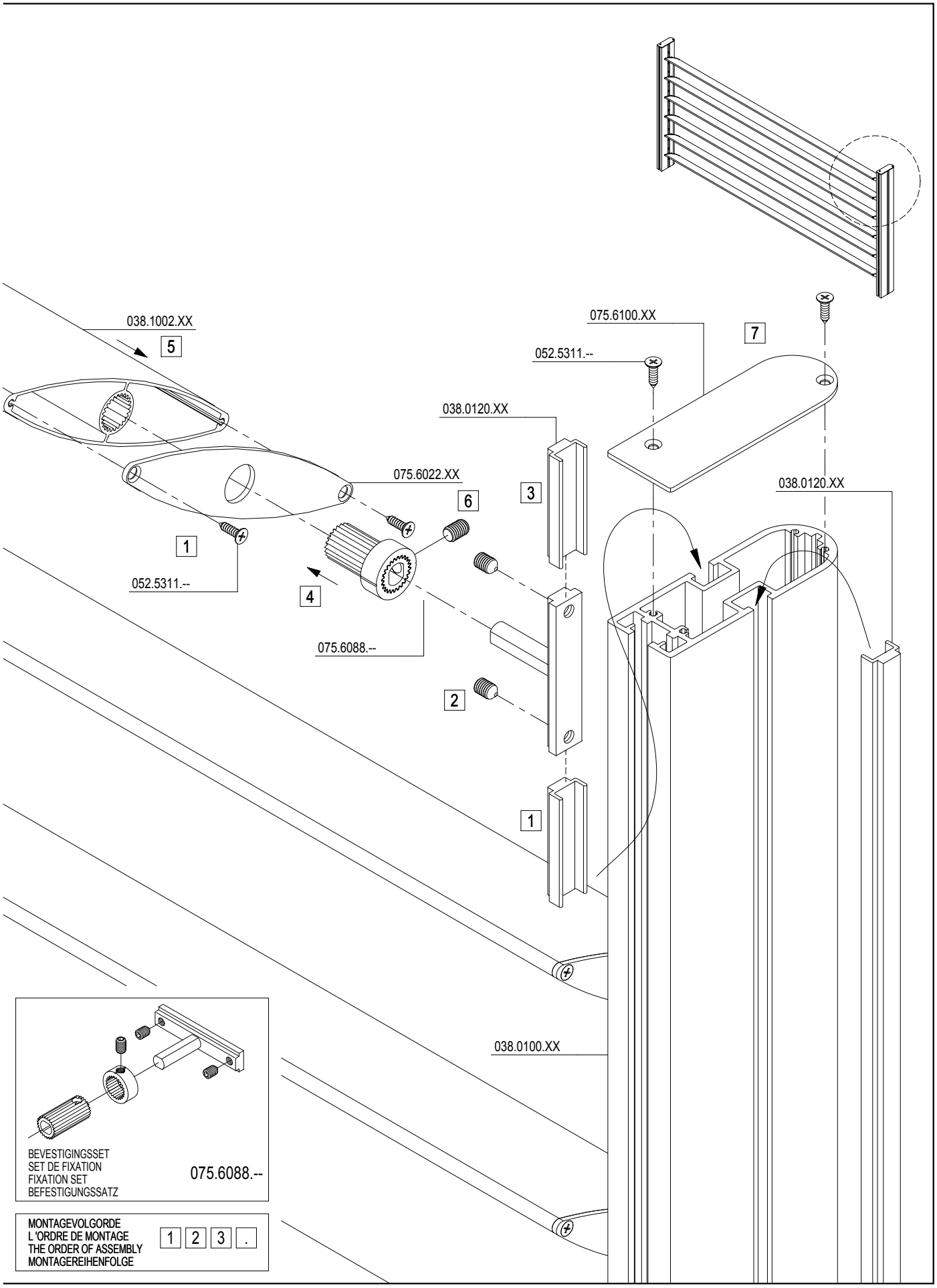

F

MONTAGE VASTE LAMELLEN HORIZONTAAL
MONTAGE LAMES FIXES HORIZONTALEMENT
ASSEMBLY FIXED LOUVRES HORIZONTALLY
MONTAGE FESTE LAMELLEN HORIZONTAL

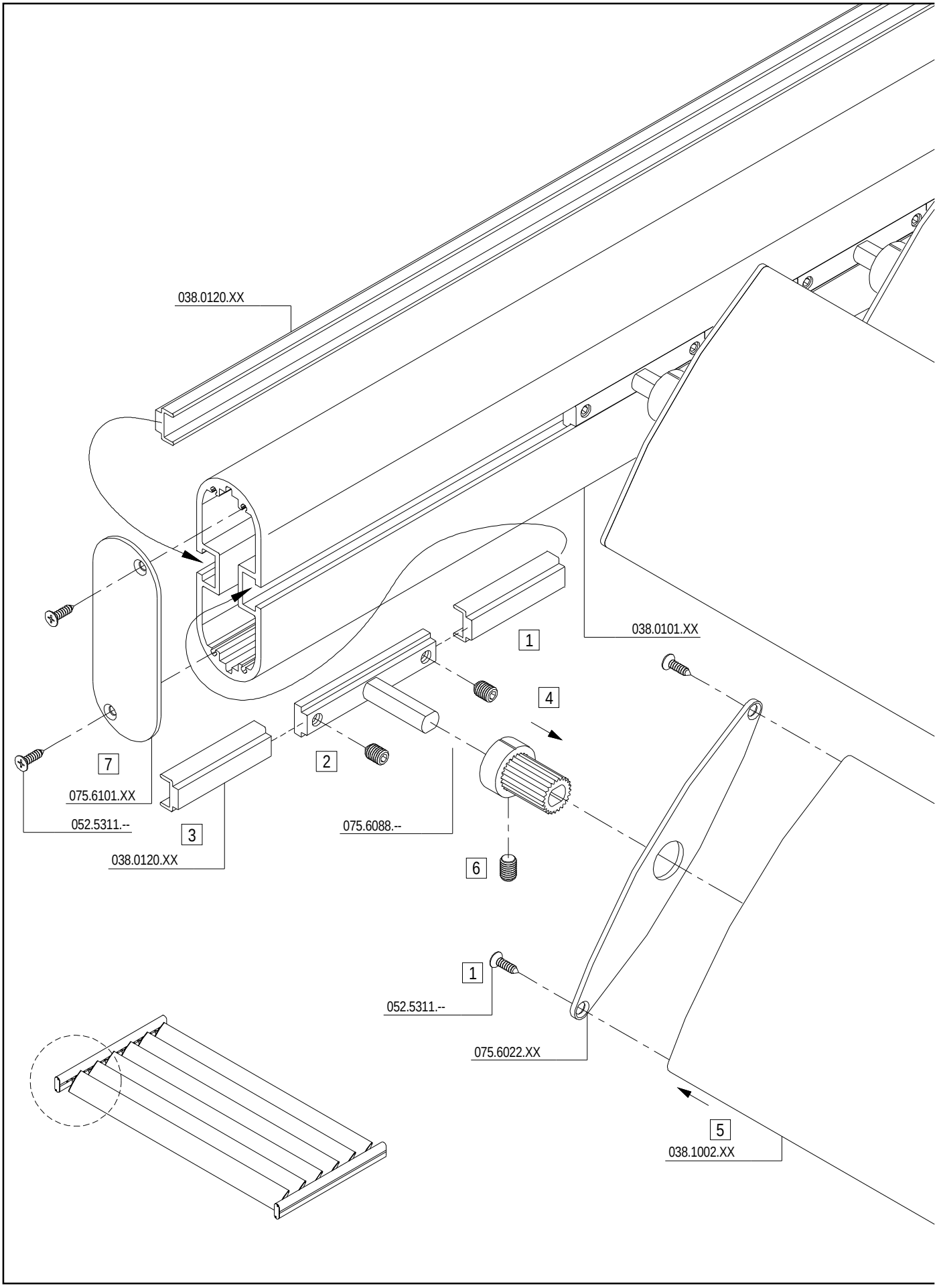

F

MONTAGE VASTE LAMELLEN HORIZONTAAL
MONTAGE LAMES FIXES HORIZONTALEMENT
ASSEMBLY FIXED LOUVRES HORIZONTALLY
MONTAGE FESTE LAMELLEN HORIZONTAL

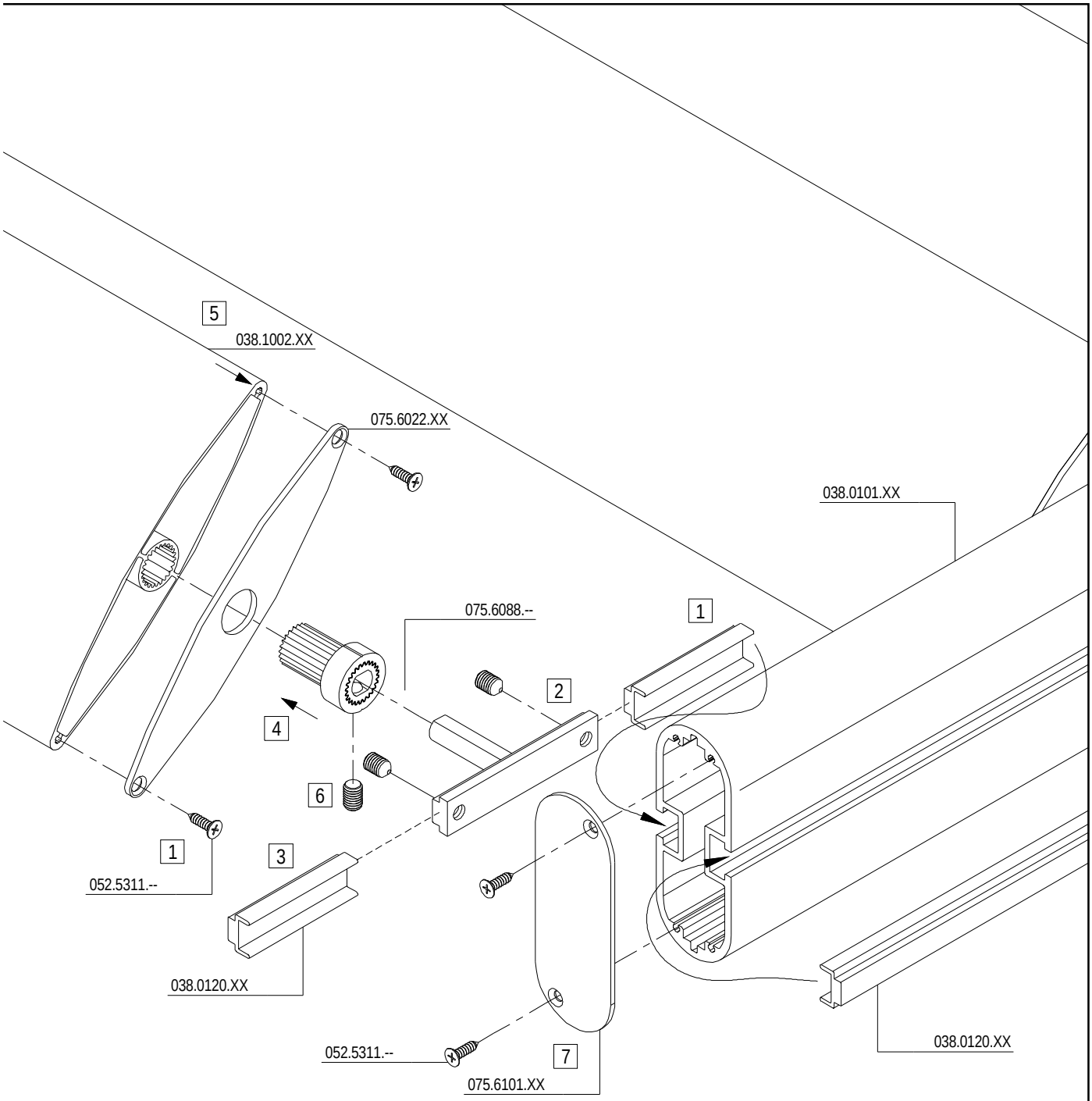

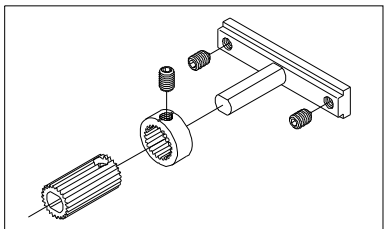

BEVESTIGINGSSET
SET DE FIXATION
FIXATION SET
BEFESTIGUNGSSATZ

075.6088.--

MONTAGEVOLGORDE
L 'ORDRE DE MONTAGE
THE ORDER OF ASSEMBLY
MONTAGEREIHENFOLGE

1 2 3 .

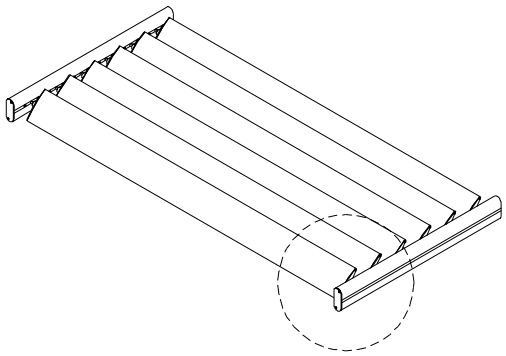

F

D0061265

BS 100

MONTAGE BEWEEGBARE LAMELLEN
MONTAGE LAMES MOBILES
ASSEMBLY MOVEABLE LOUVRES
MONTAGE BEWEGLICHE LAMELLEN

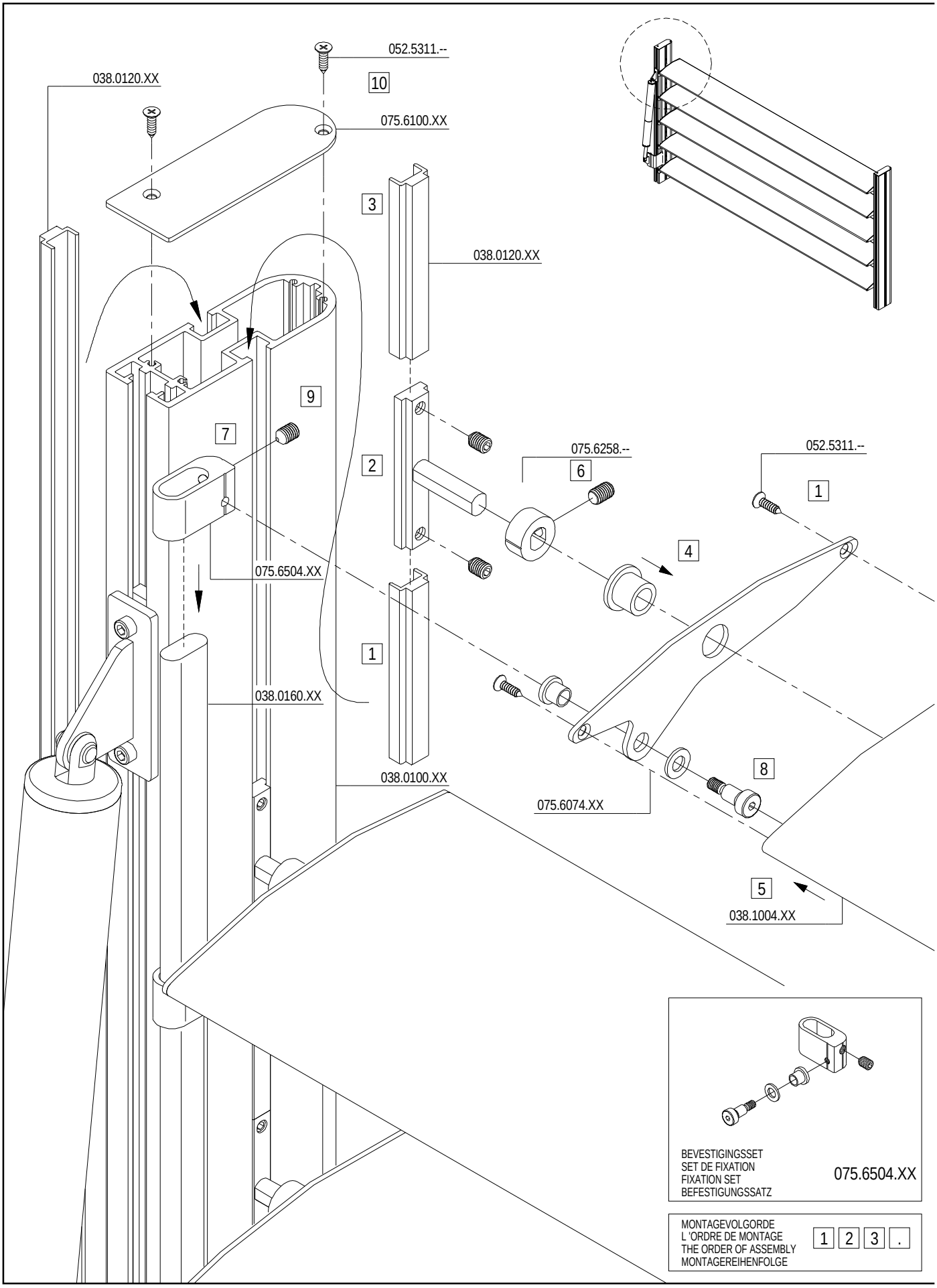

F

MONTAGE BEWEEGBARE LAMELLEN
MONTAGE LAMES MOBILES
ASSEMBLY MOVEABLE LOUVRES
MONTAGE BEWEGLICHE LAMELLEN

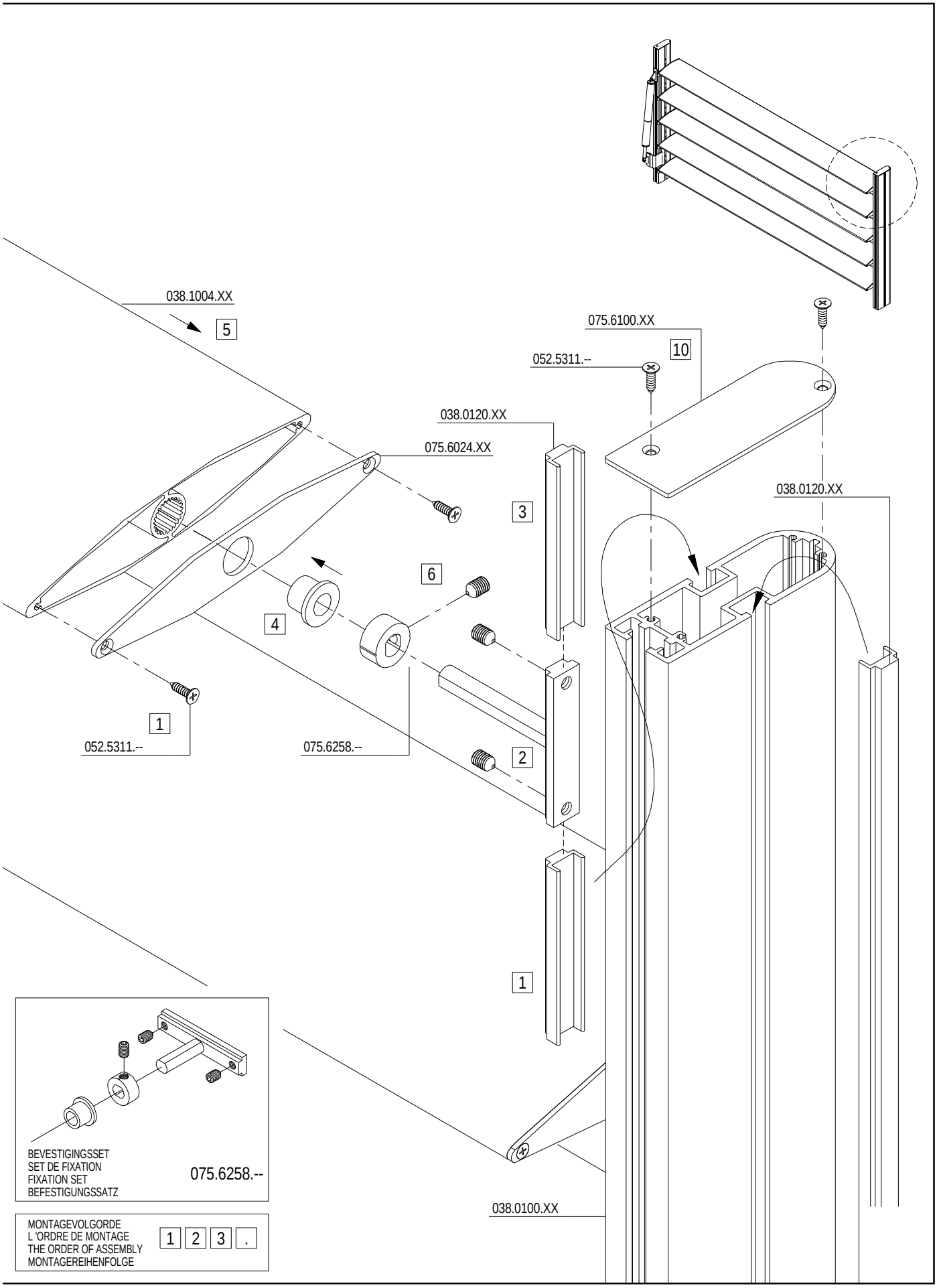

F

MONTAGE MOTORAANSTURING
MONTAGE COMMANDE MOTEUR
ASSEMBLY MOTOR DRIVE
MONTAGE MOTORSTEUERUNG

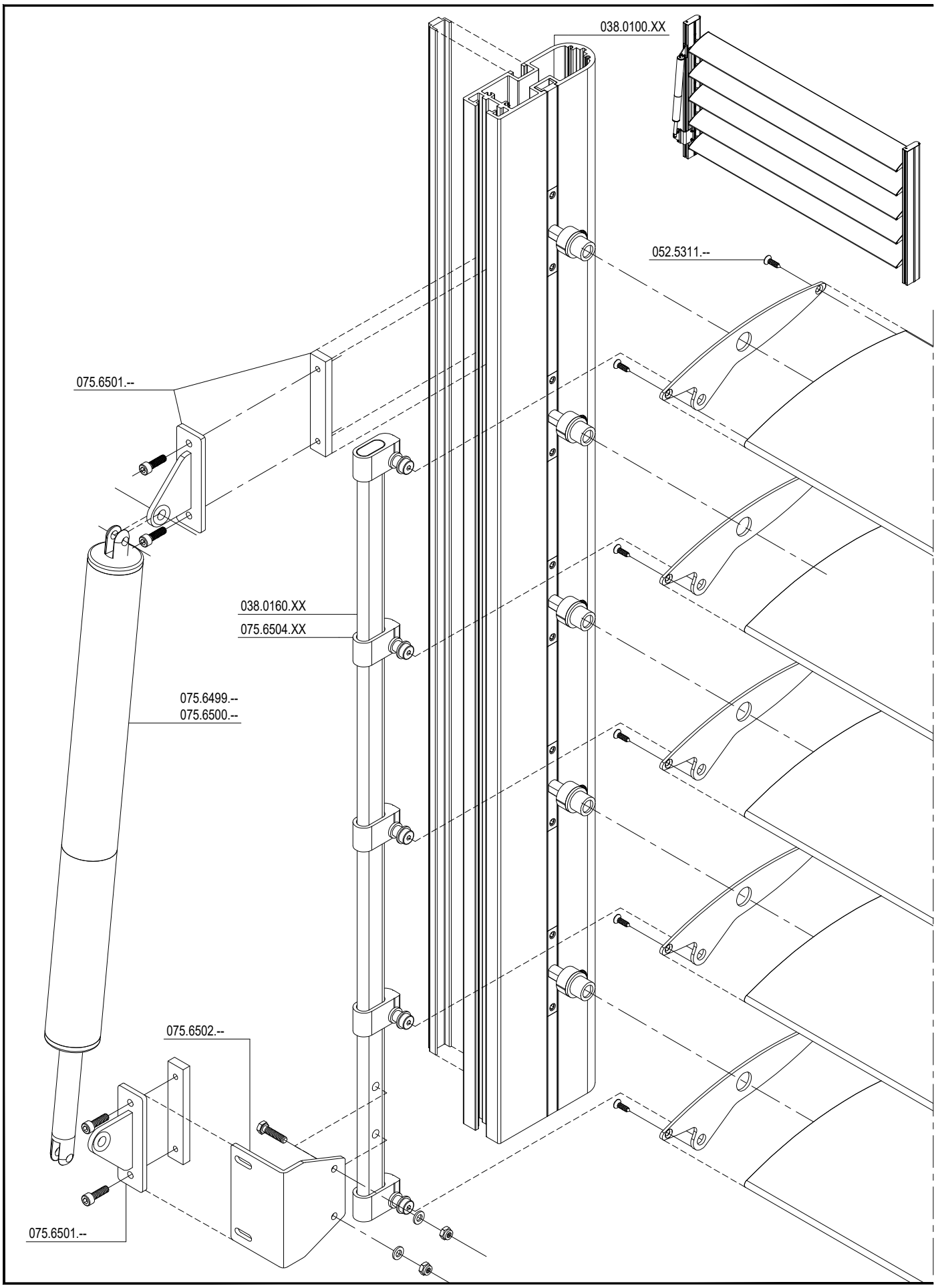

F

MONTAGE MOTORAANSTURING
MONTAGE COMMANDE MOTEUR
ASSEMBLY MOTOR DRIVE
MONTAGE MOTORSTEUERUNG

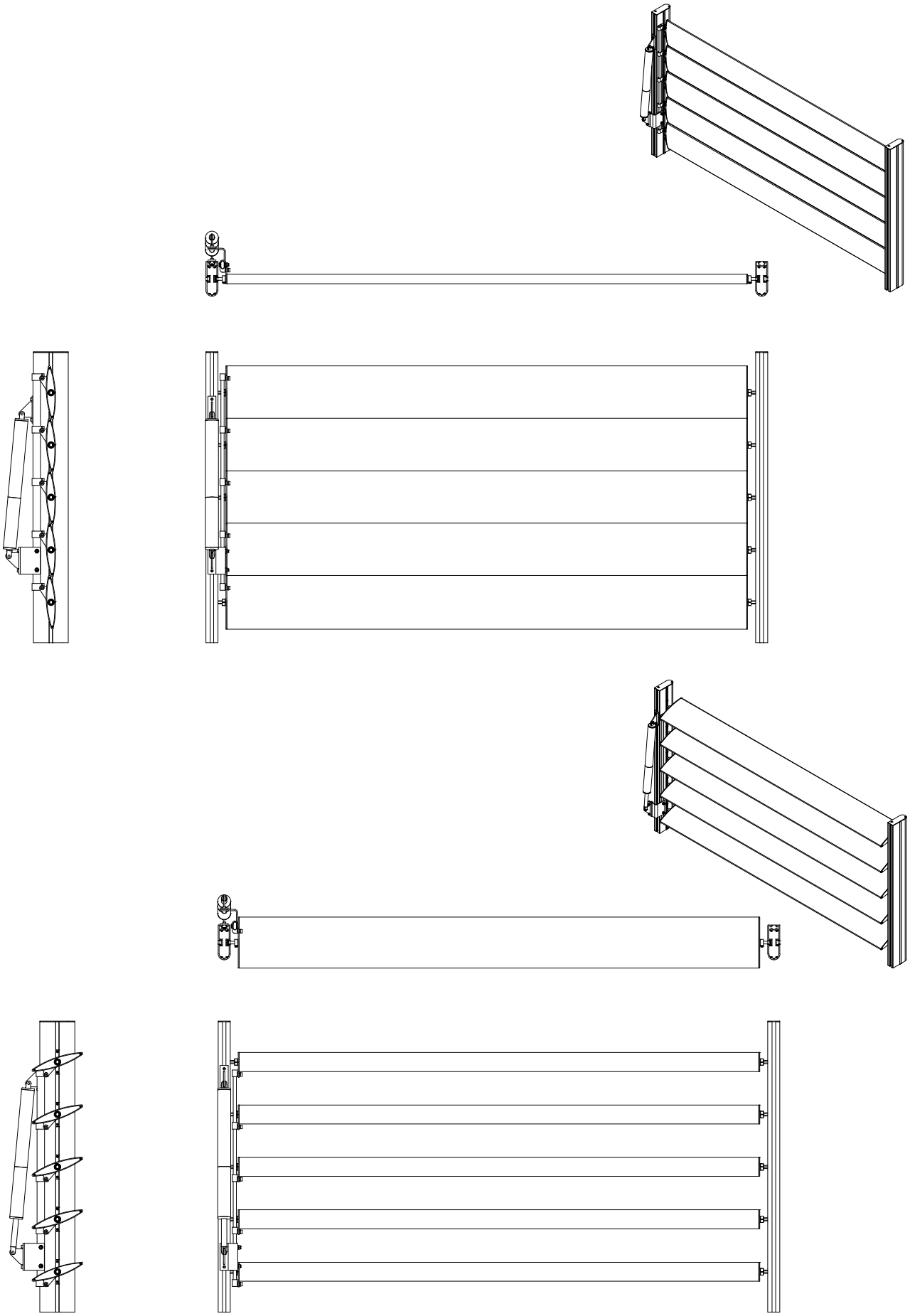

D0061232

MONTAGE MOTORAANSTURING
MONTAGE COMMANDE MOTEUR
ASSEMBLY MOTOR DRIVE
MONTAGE MOTORSTEUERUNG

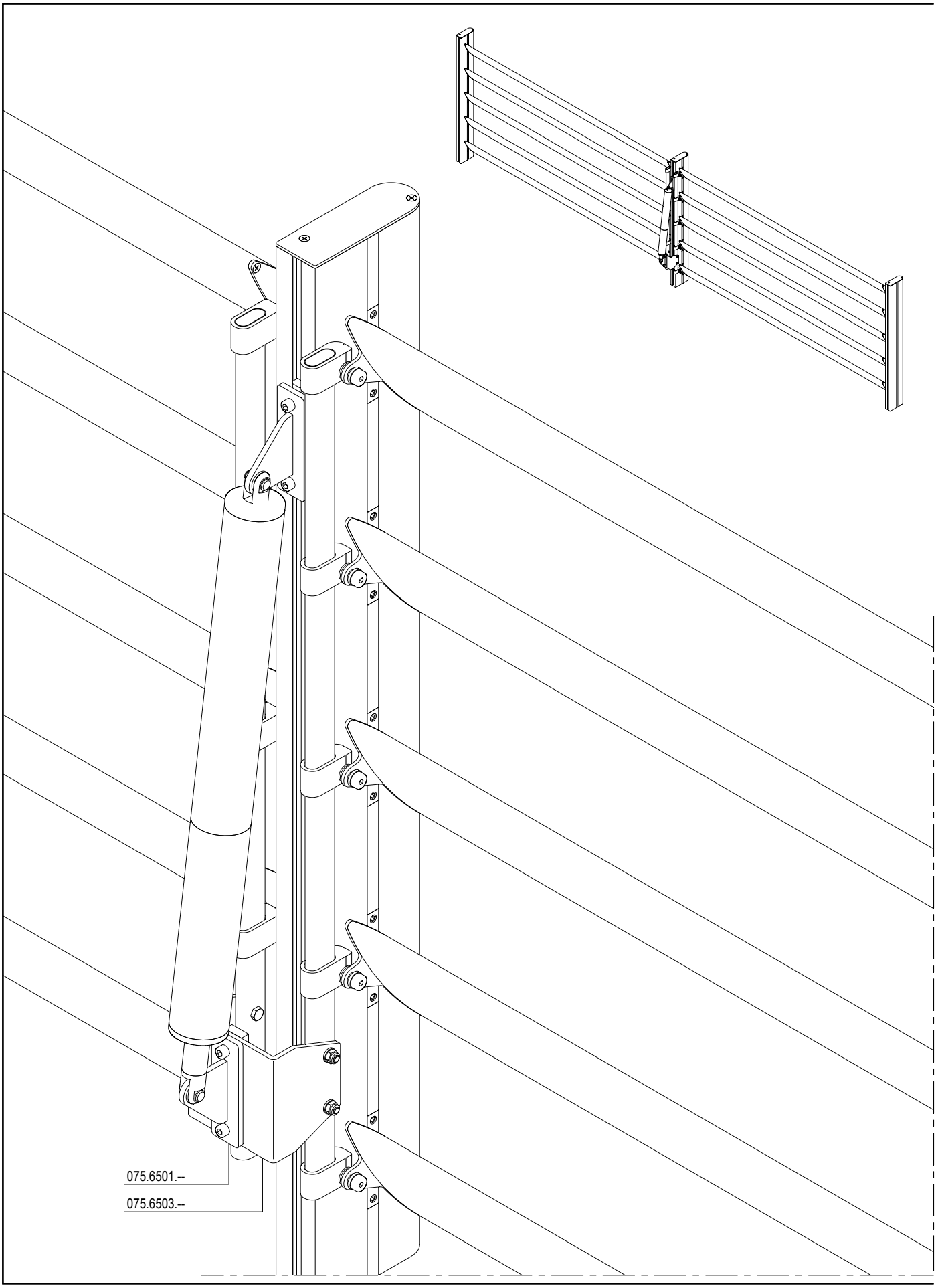

F

MONTAGE MOTORAANSTURING
MONTAGE COMMANDE MOTEUR
ASSEMBLY MOTOR DRIVE
MONTAGE MOTORSTEUERUNG

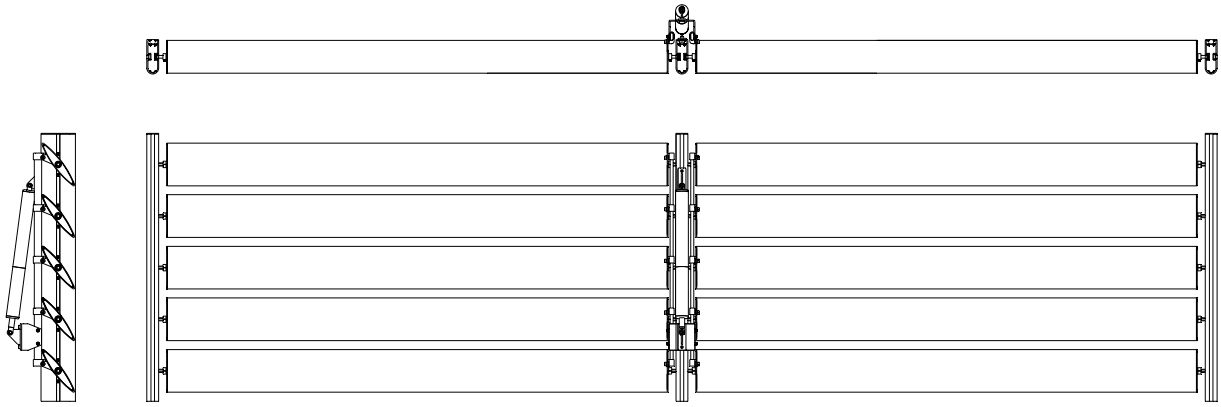

MONTAGE LAMELLEN
MONTAGE LAMES
ASSEMBLY LOUVRES
MONTAGE LAMELLEN

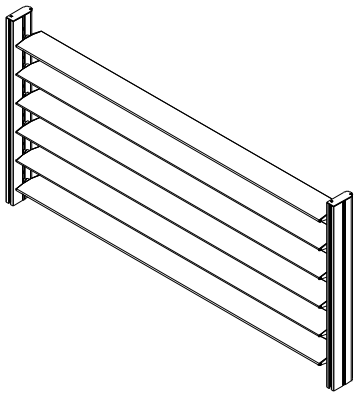

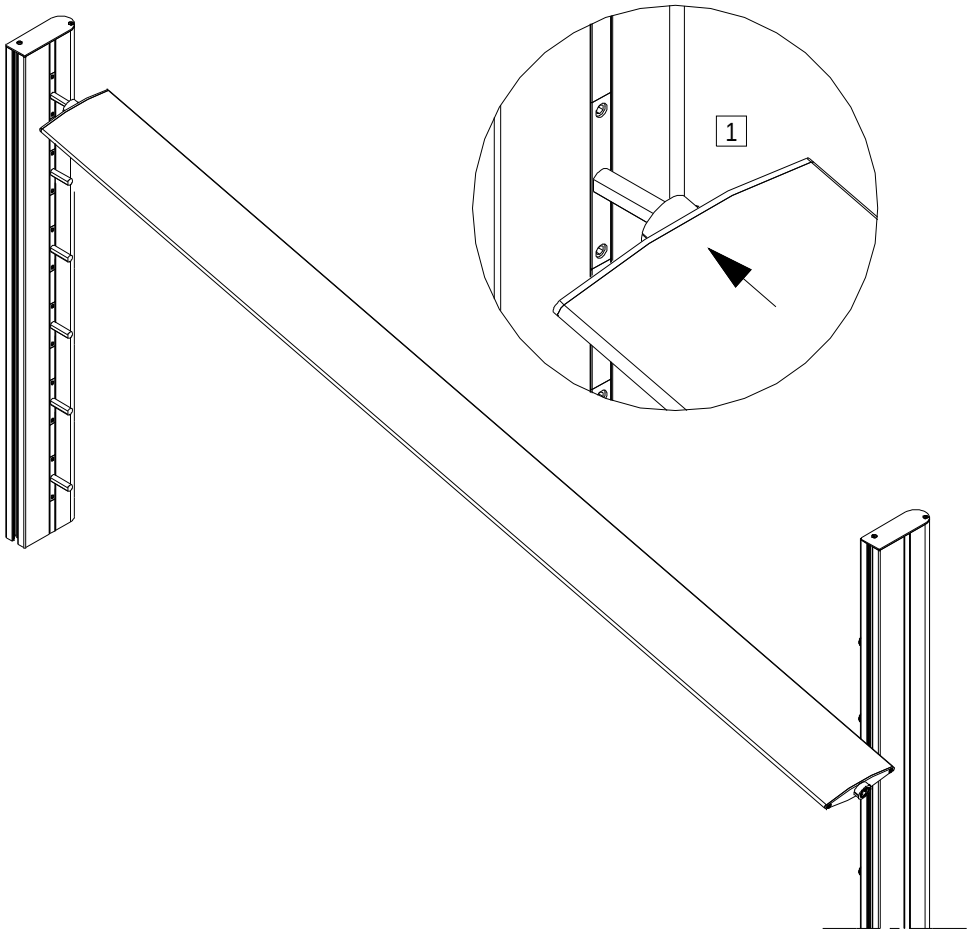

D0061236

F

MONTAGE LAMELLEN
MONTAGE LAMES
ASSEMBLY LOUVRES
MONTAGE LAMELLEN

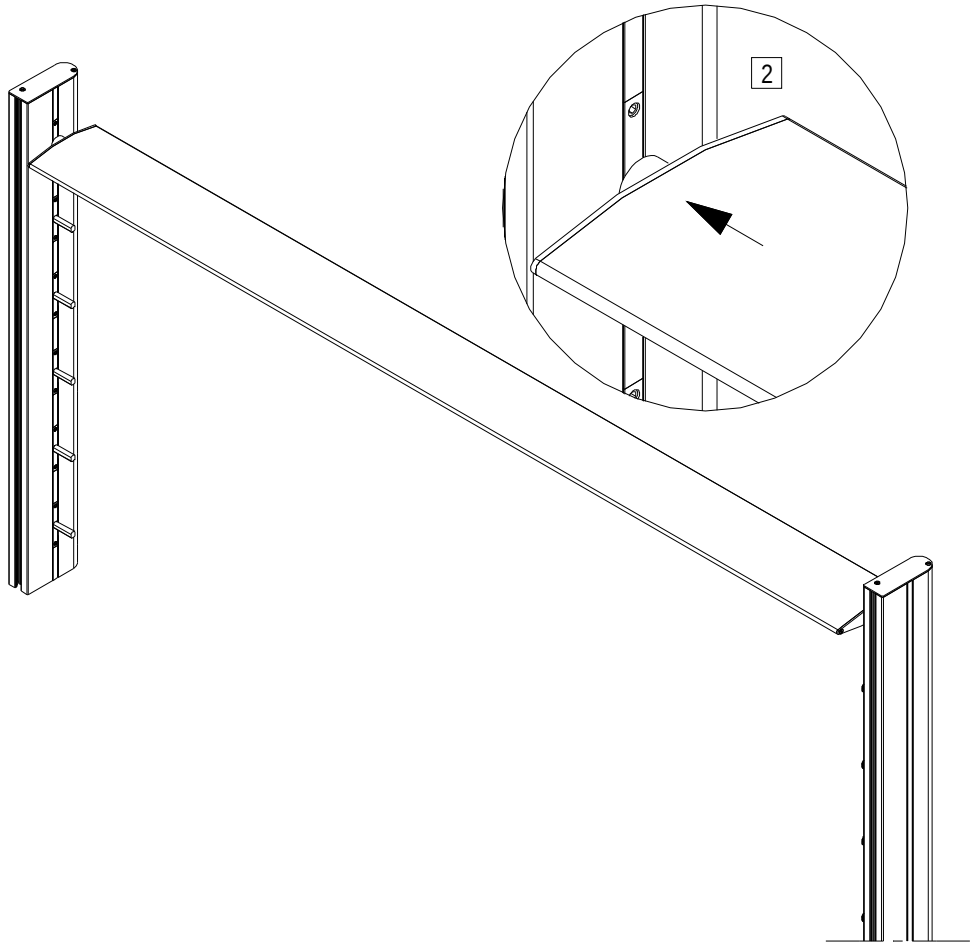

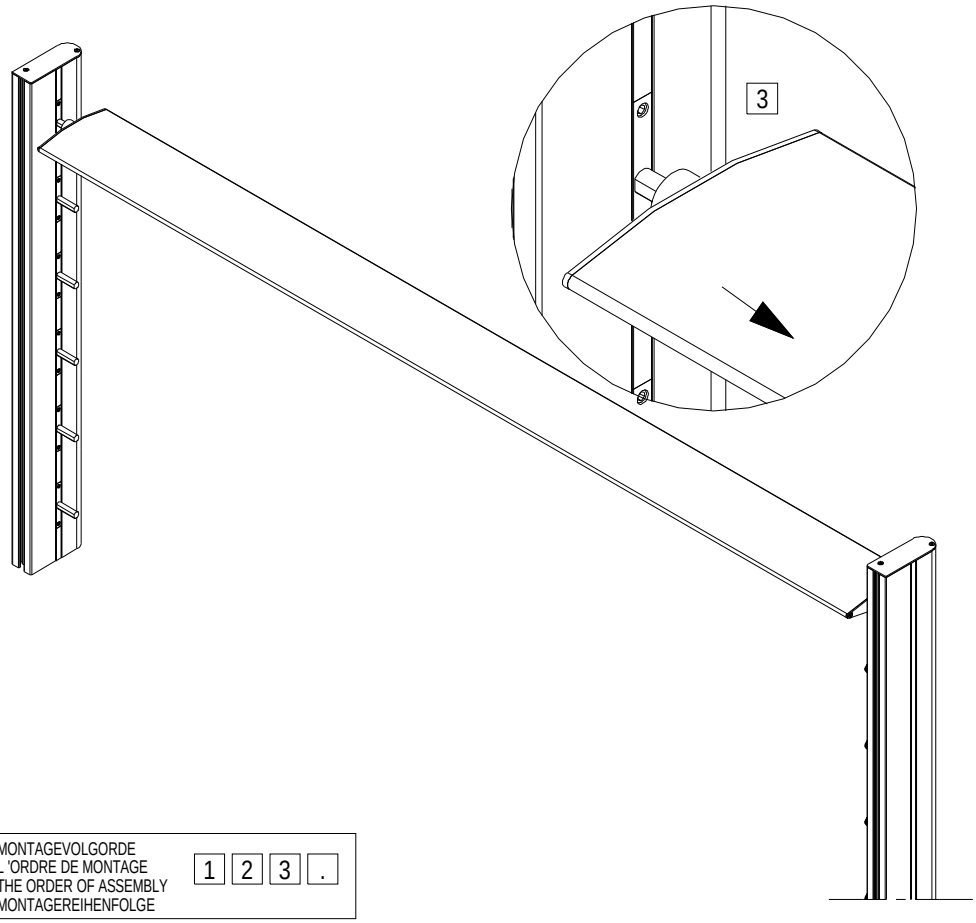

MONTAGEVOLGORDE
L 'ORDRE DE MONTAGE
THE ORDER OF ASSEMBLY
MONTAGEREIHENFOLGE

1 2 3 .

D0061236

F

MONTAGE VASTE LAMELLEN HORIZONTAAL
MONTAGE LAMES FIXES HORIZONTALEMENT
ASSEMBLY FIXED LOUVRES HORIZONTALLY
MONTAGE FESTE LAMELLEN HORIZONTAL

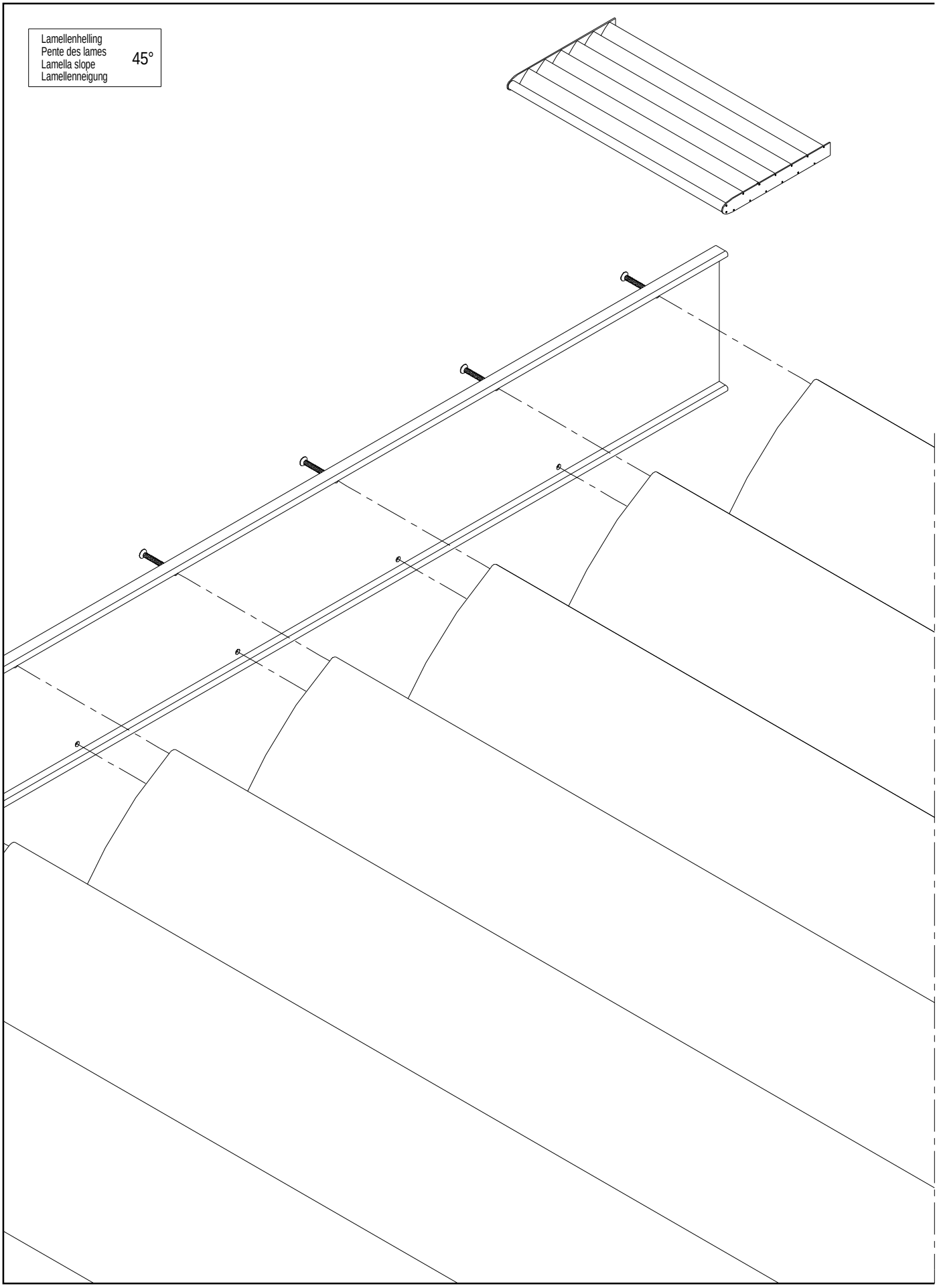

F

MONTAGE VASTE LAMELLEN HORIZONTAAL
MONTAGE LAMES FIXES HORIZONTALEMENT
ASSEMBLY FIXED LOUVRES HORIZONTALLY
MONTAGE FESTE LAMELLEN HORIZONTAL

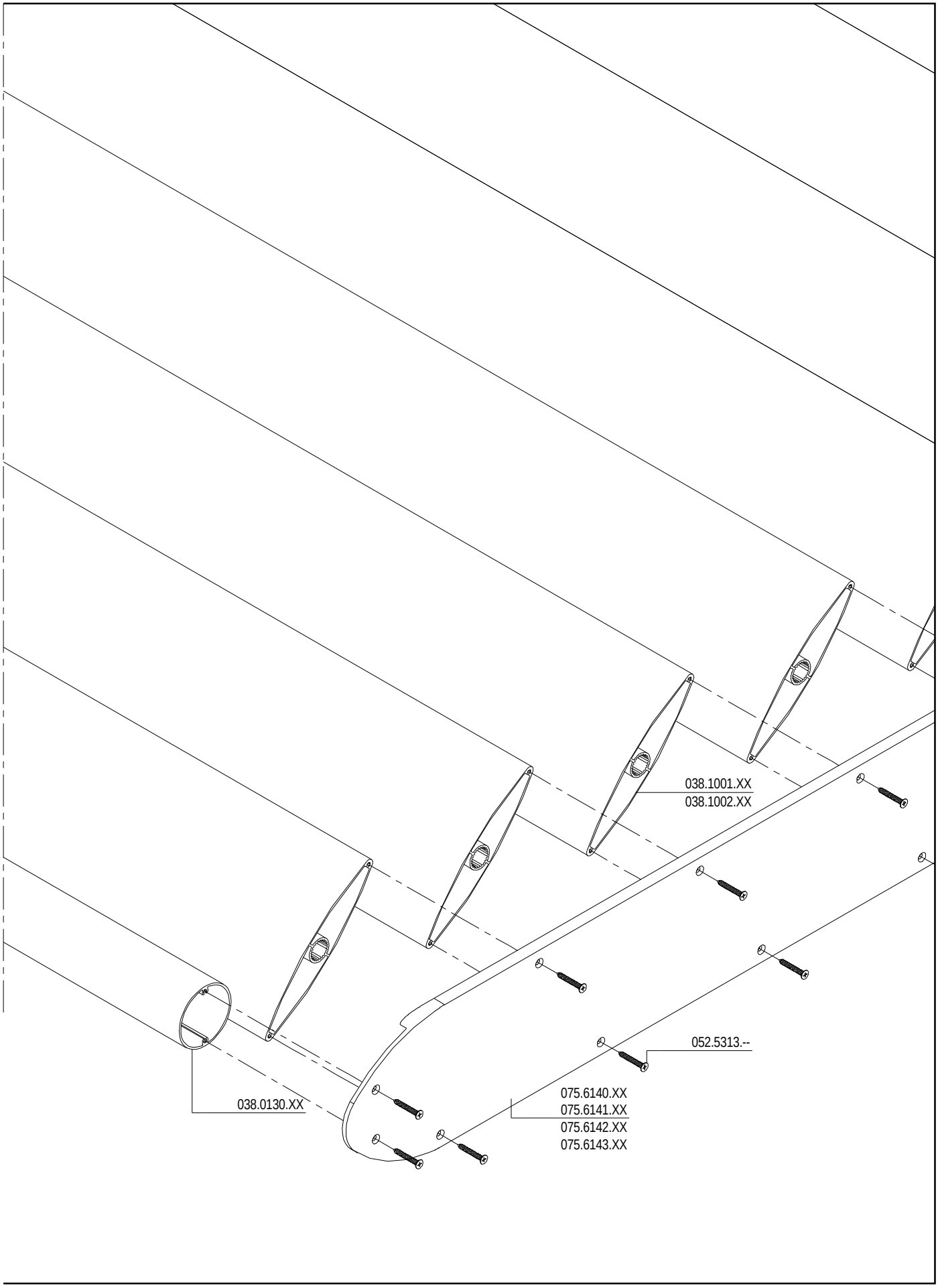

MONTAGE LAMEL HOUDER
ASSEMBLAGE SUPPORT-LAME
ASSEMBLY LOUVRE GRIP
MONTAGE LAMELLEN HALTER

MONTAGEVOLGORDE
L 'ORDRE DE MONTAGE
THE ORDER OF ASSEMBLY
MONTAGEREIHENFOLGE

1 2 3 .

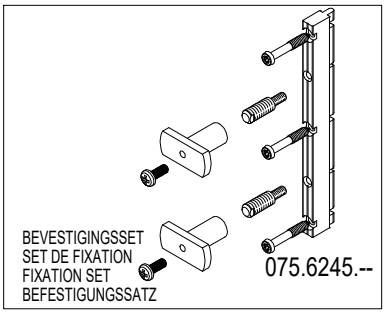

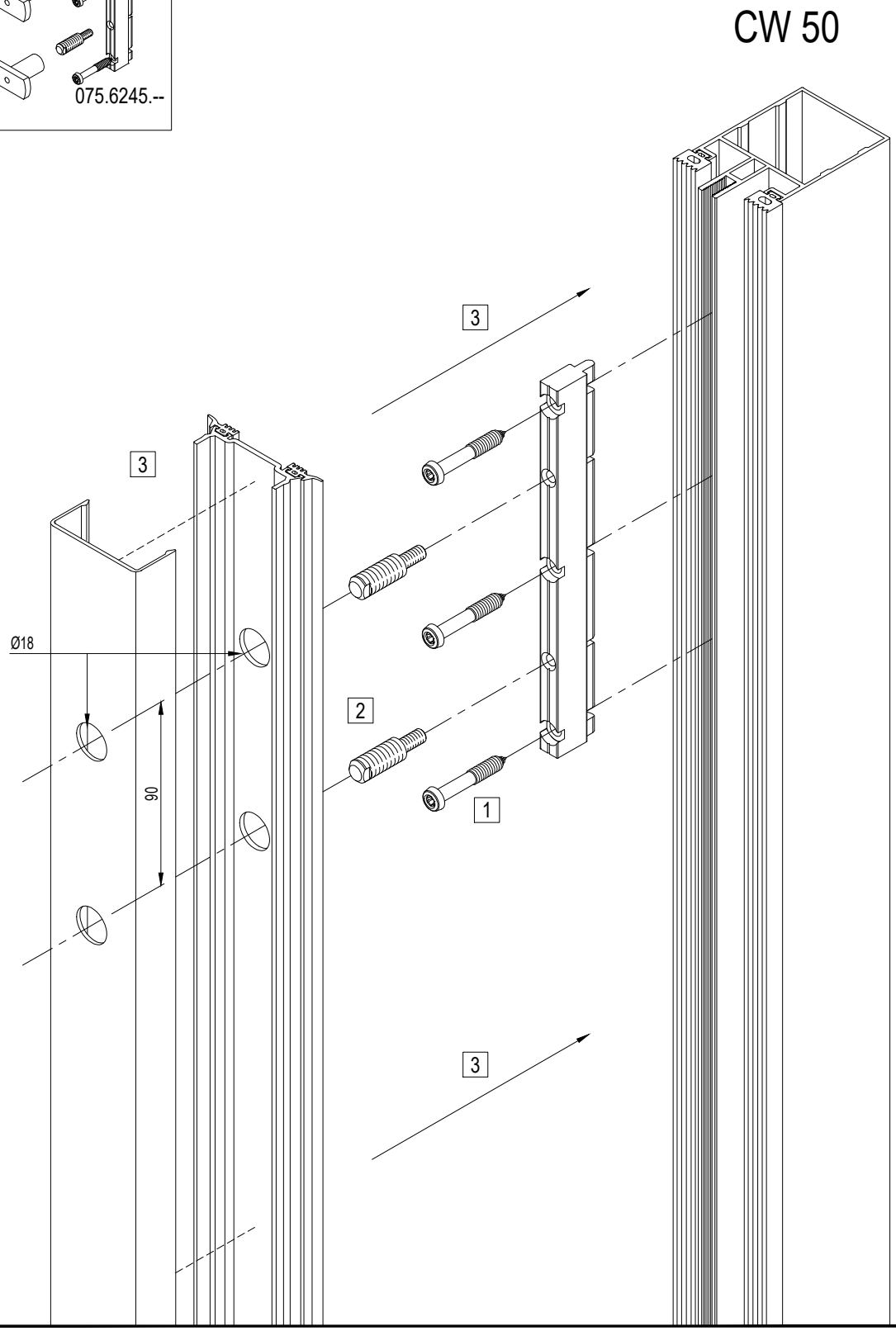

F

MONTAGE LAMEL HOUDER
ASSEMBLAGE SUPPORT-LAME
ASSEMBLY LOUVRE GRIP
MONTAGE LAMELLEN HALTER

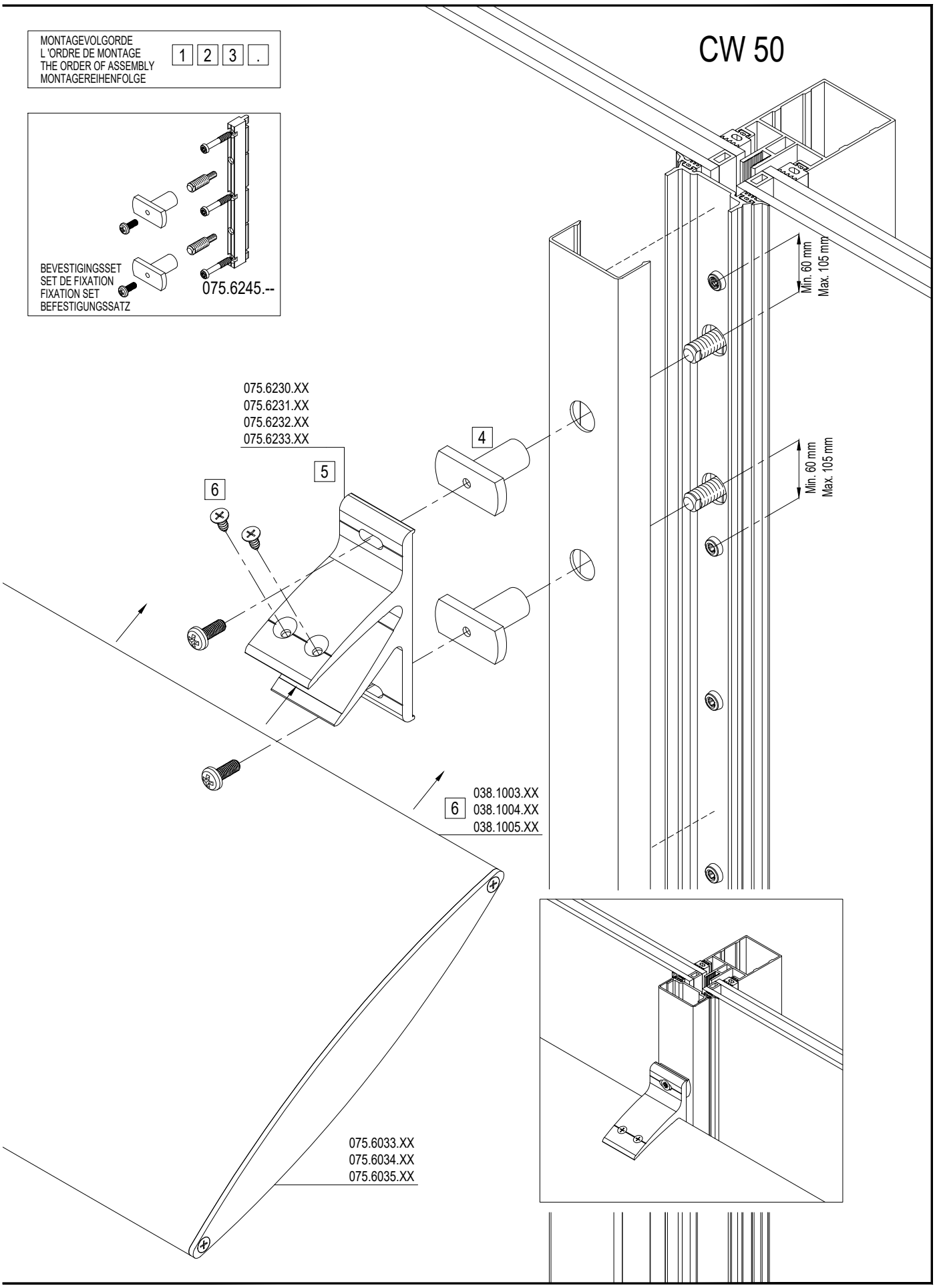

F

MONTAGE LAMEL HOUDER
ASSEMBLAGE SUPPORT-LAME
ASSEMBLY LOUVRE GRIP
MONTAGE LAMELLEN HALTER

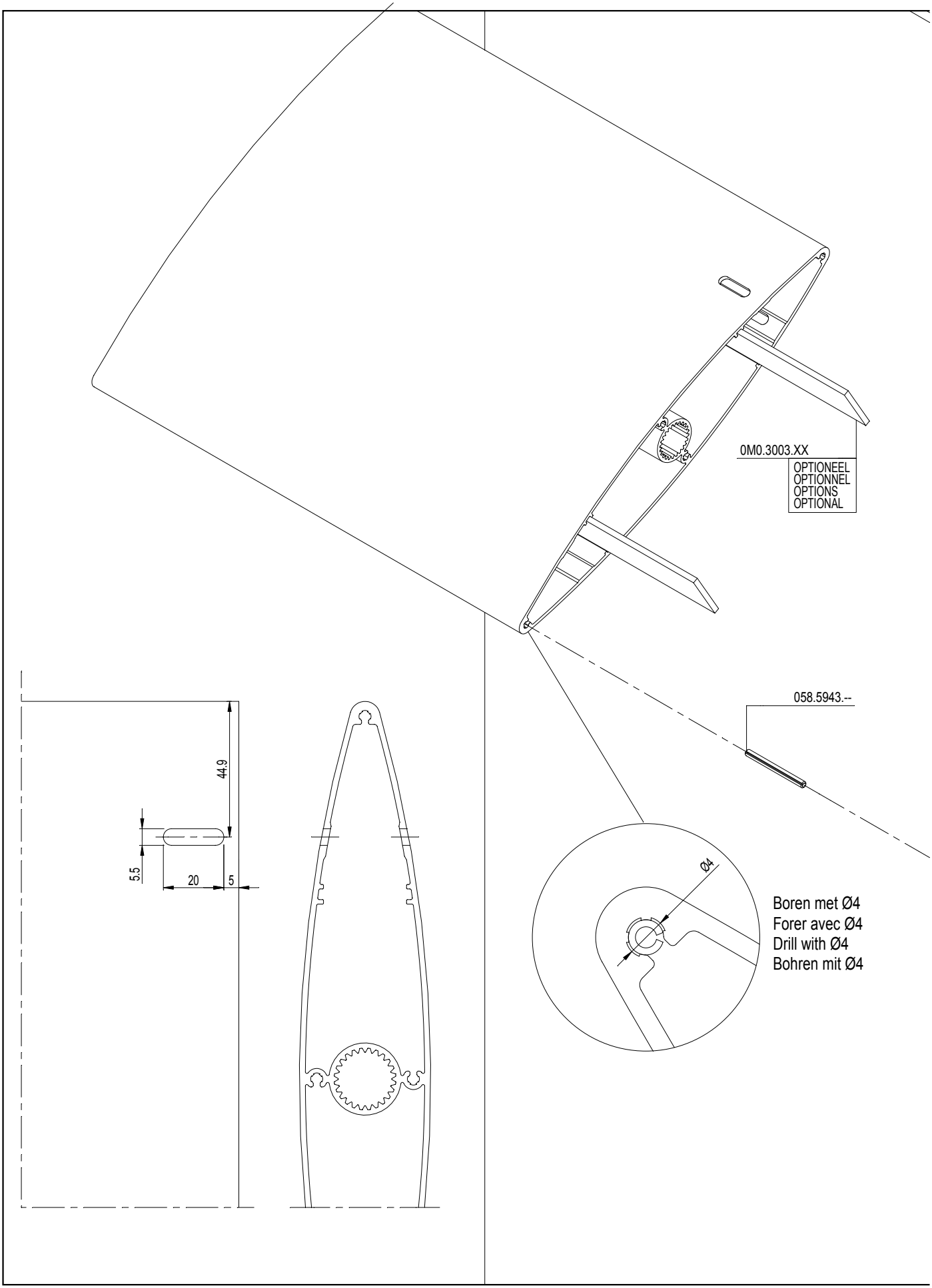

MONTAGE LAMEL HOUDER
ASSEMBLAGE SUPPORT-LAME
ASSEMBLY LOUVRE GRIP
MONTAGE LAMELLEN HALTER

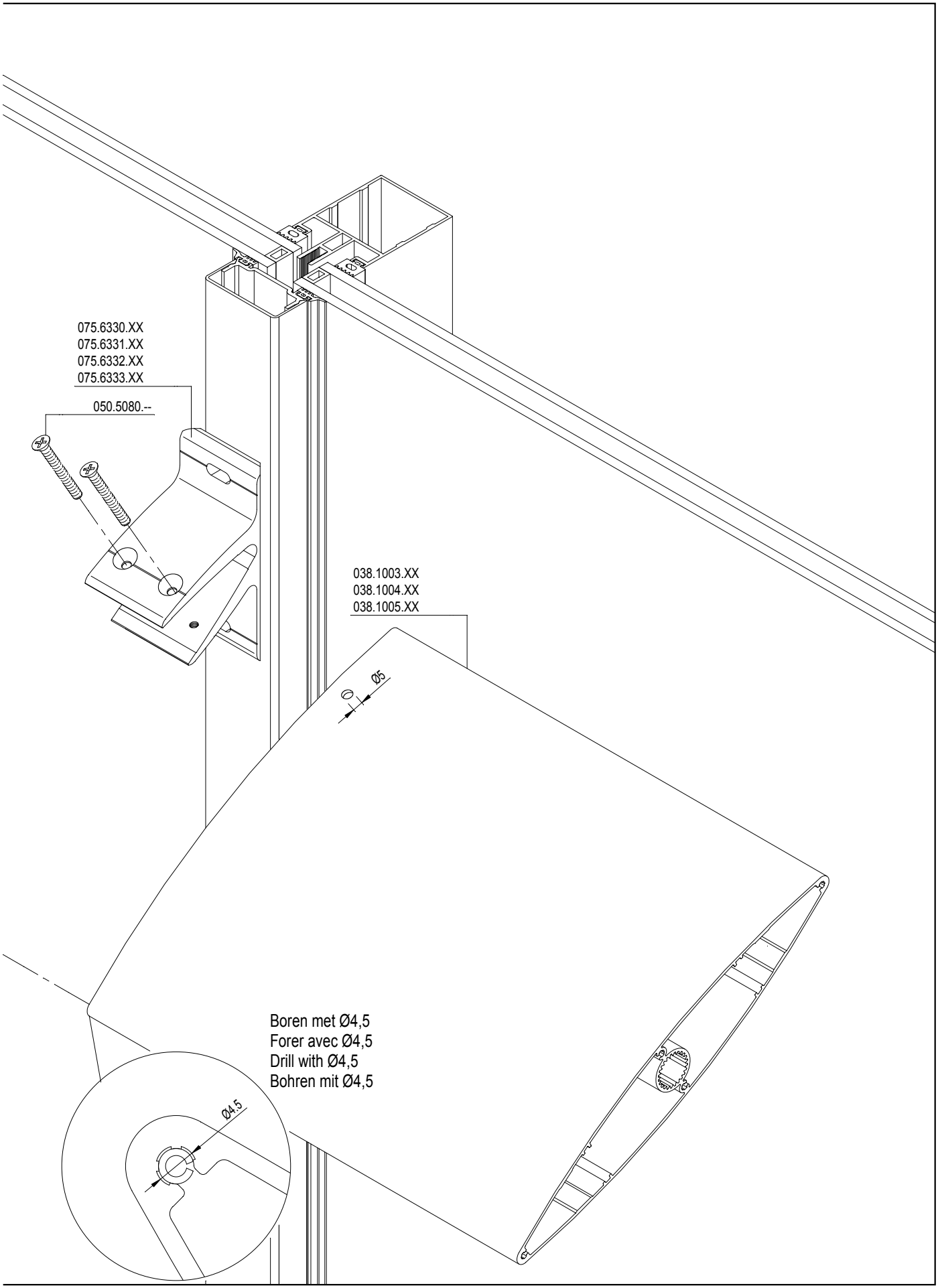

F

MONTAGE PROJECTOPLOSSING VASTE LAMELLEN
MONTAGE SOLUTION PROJET LAMES FIXES
ASSEMBLY PROJECT SOLUTION FIXED LOUVRES
MONTAGE PROJEKTLÖSUNG FESTE LAMELLEN

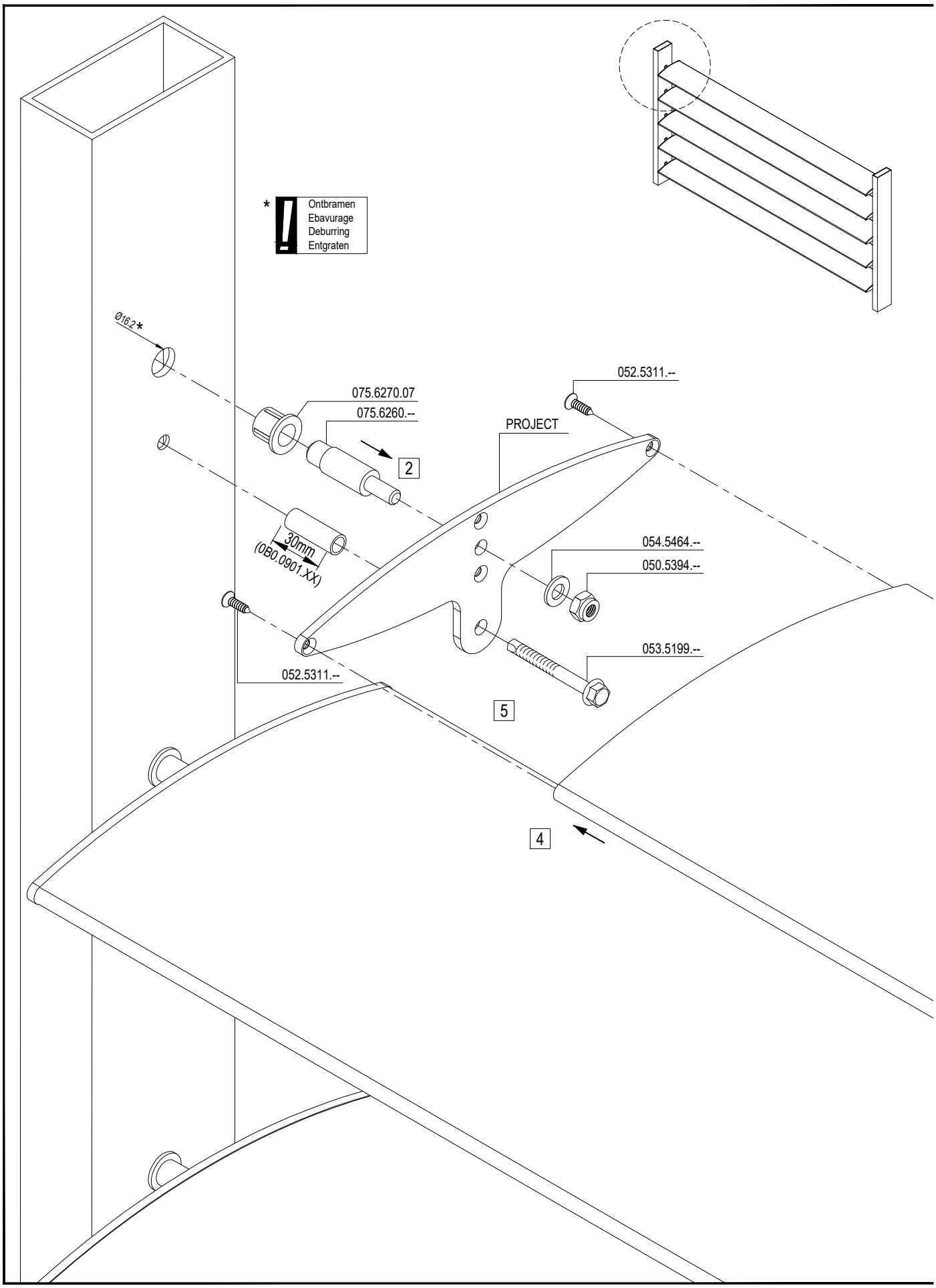

MONTAGE PROJECTOPLOSSING VASTE LAMELLEN
MONTAGE SOLUTION PROJET LAMES FIXES
ASSEMBLY PROJECT SOLUTION FIXED LOUVRES
MONTAGE PROJEKTLÖSUNG FESTE LAMELLEN

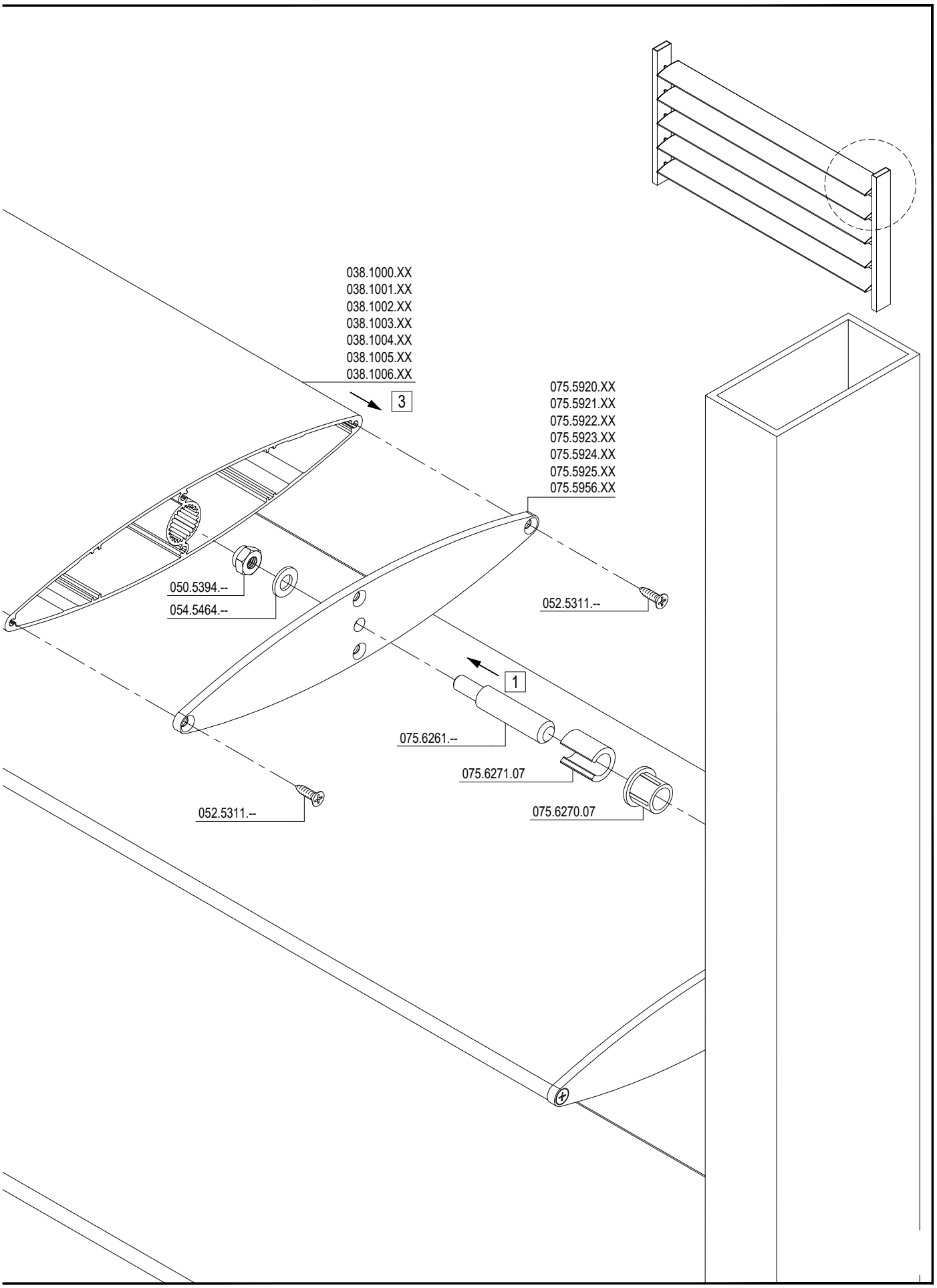

F

MONTAGE PROJECTOPLOSSING BEWEEGBARE LAMELLEN
MONTAGE SOLUTION PROJET LAMES MOBILES
ASSEMBLY PROJECT SOLUTION MOVEABLE LOUVRES
MONTAGE PROJEKTLÖSUNG BEWEGLICHE LAMELLEN

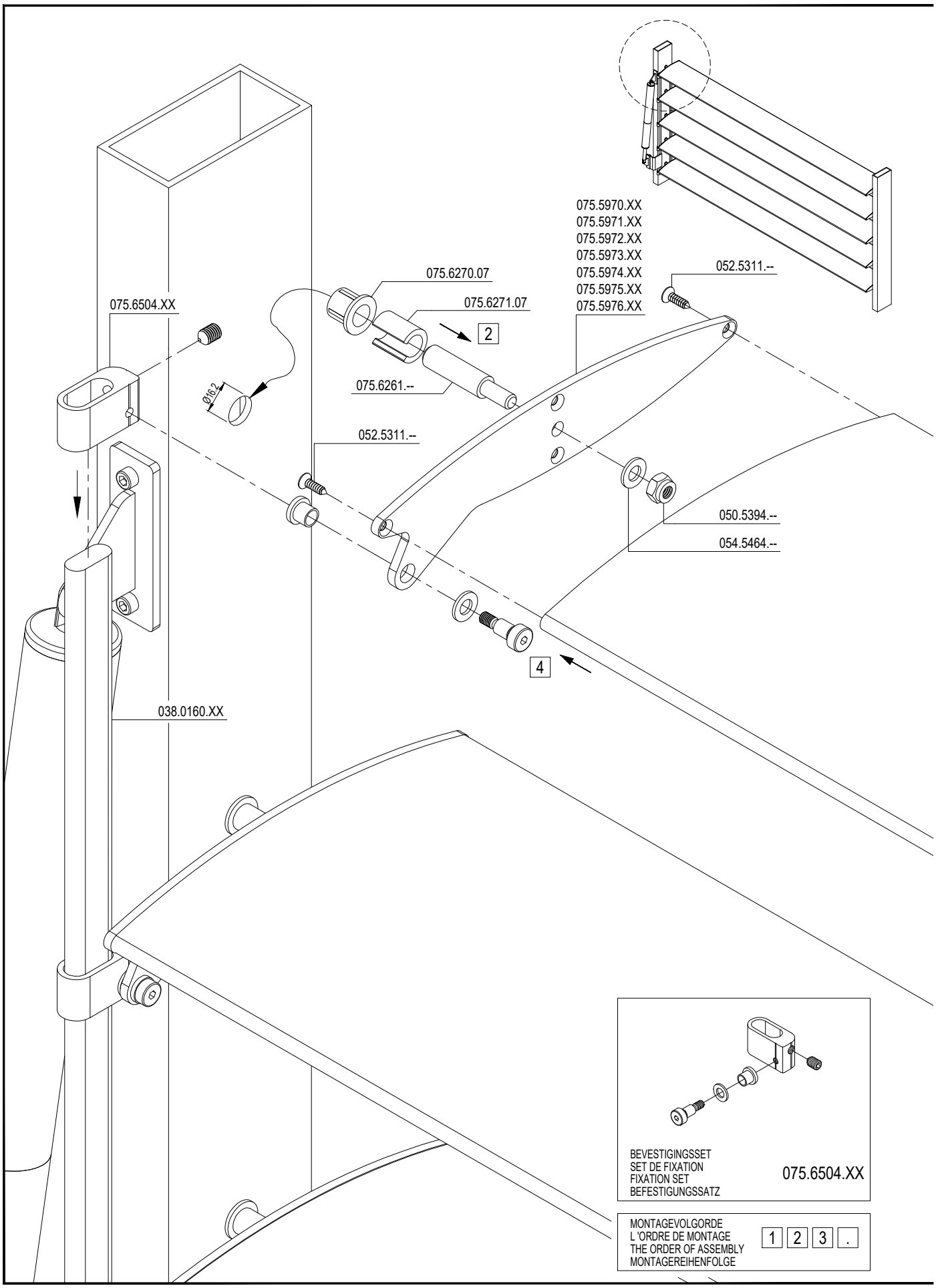

F

MONTAGE PROJECTOPLOSSING BEWEEGBARE LAMELLEN
MONTAGE SOLUTION PROJET LAMES MOBILES
ASSEMBLY PROJECT SOLUTION MOVEABLE LOUVRES
MONTAGE PROJEKTLÖSUNG BEWEGLICHE LAMELLEN

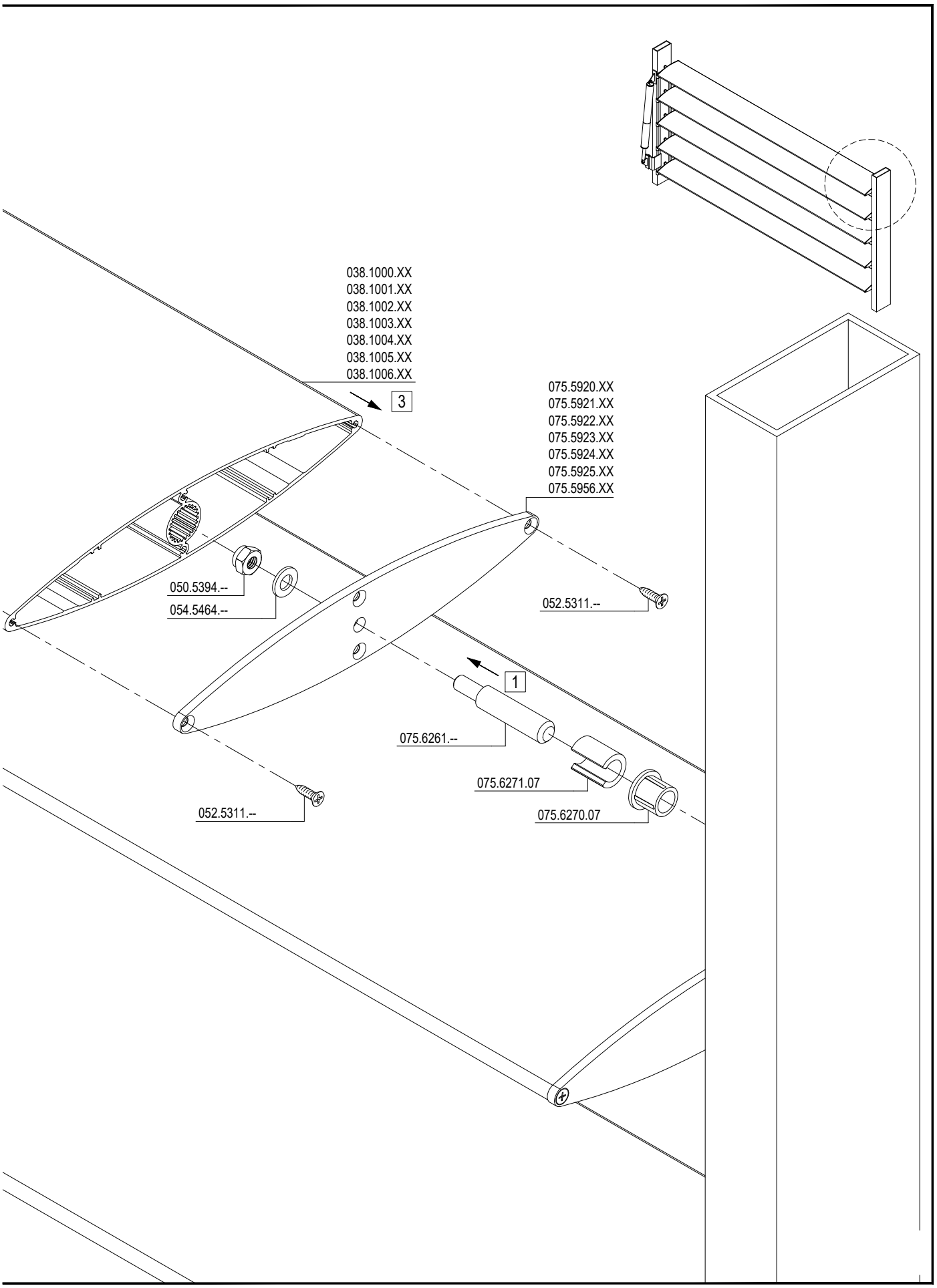

F

MONTAGE LOOPROOSTER
MONTAGE CAILLEBOTIS
ASSEMBLY WALKWAY
MONTAGE LAUFROST

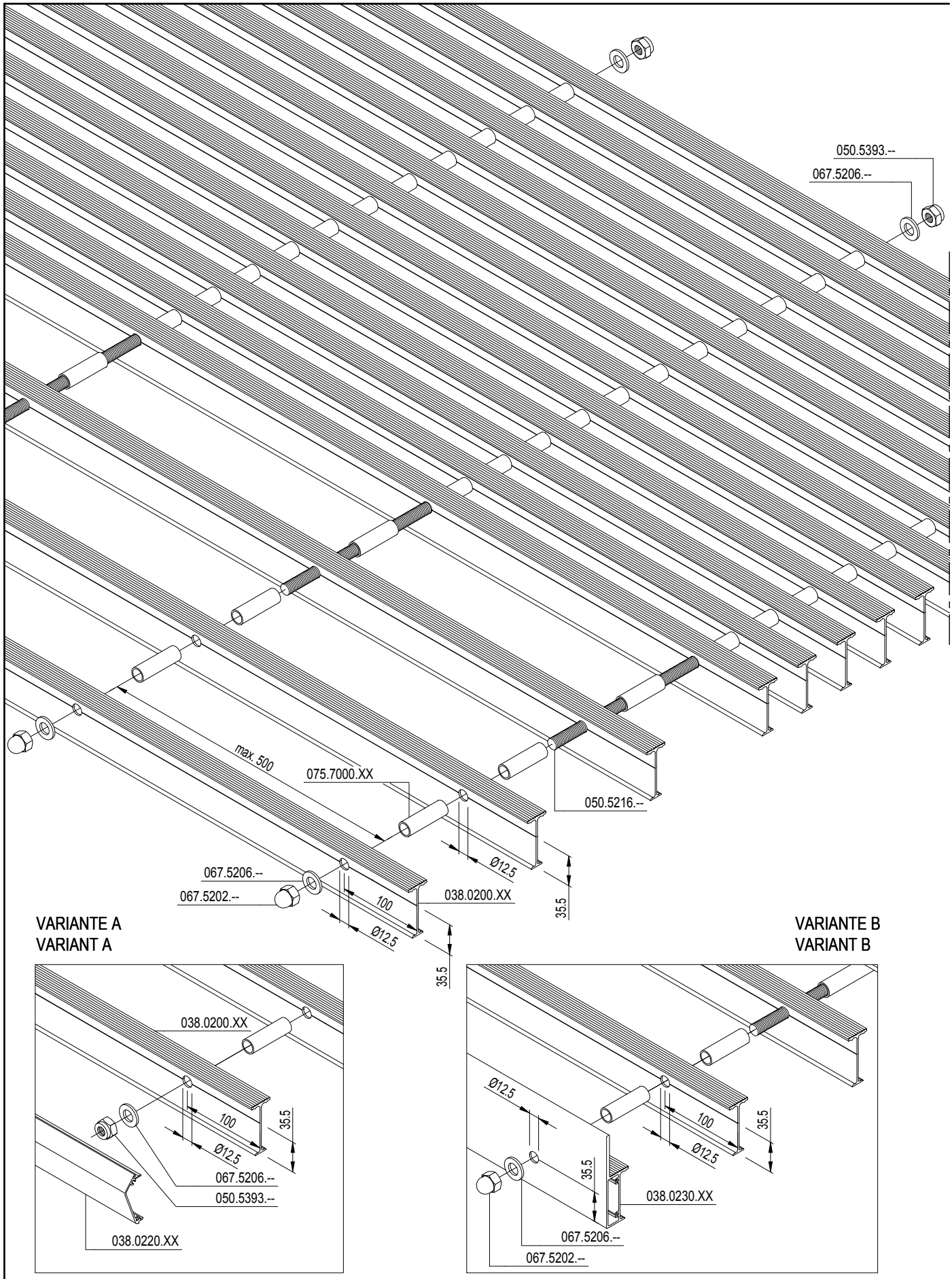

D0061238

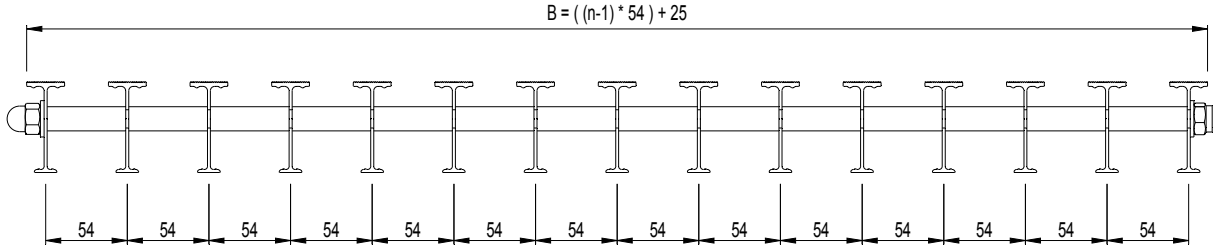

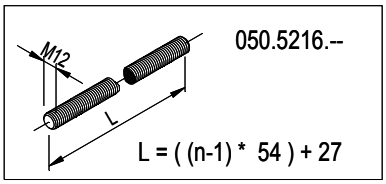

n = aantal profielen 038.0200.XX
n = nombre de profiles 038.0200.XX
n = number of profiles 038.0200.XX
n = anzahl profile 038.0200.XX

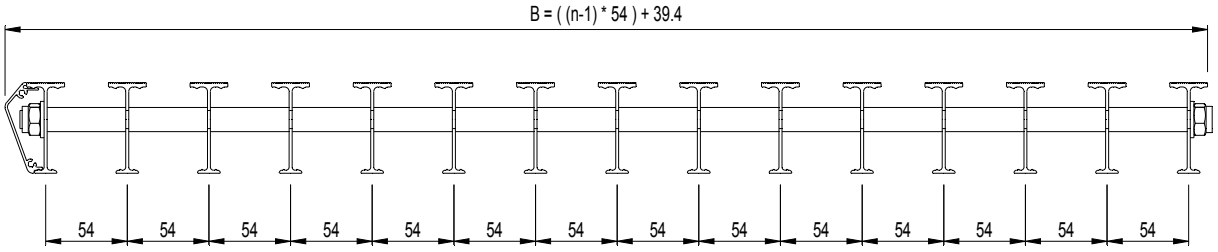

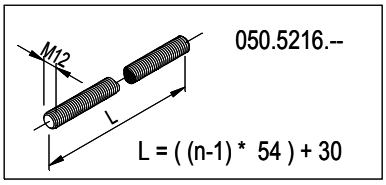

n = aantal profielen 038.0200.XX
n = nombre de profiles 038.0200.XX
n = number of profiles 038.0200.XX
n = anzahl profile 038.0200.XX

VARIANTE A
VARIANT A

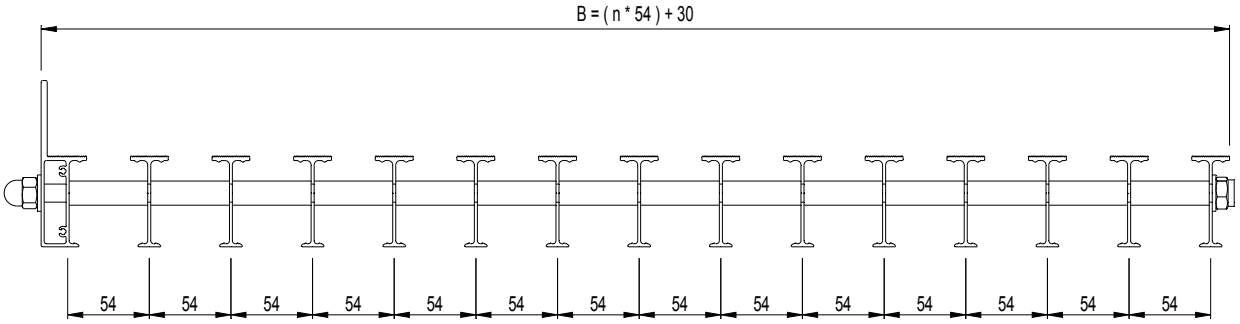

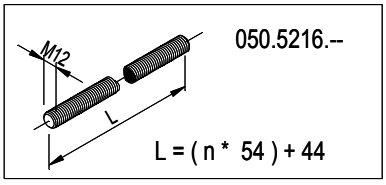

n = aantal profielen 038.0200.XX
n = nombre de profiles 038.0200.XX
n = number of profiles 038.0200.XX
n = anzahl profile 038.0200.XX

VARIANTE B
VARIANT B

F

D0061238

MONTAGE LOOPROOSTER
MONTAGE CAILLEBOTIS
ASSEMBLY WALKWAY
MONTAGE LAUFROST

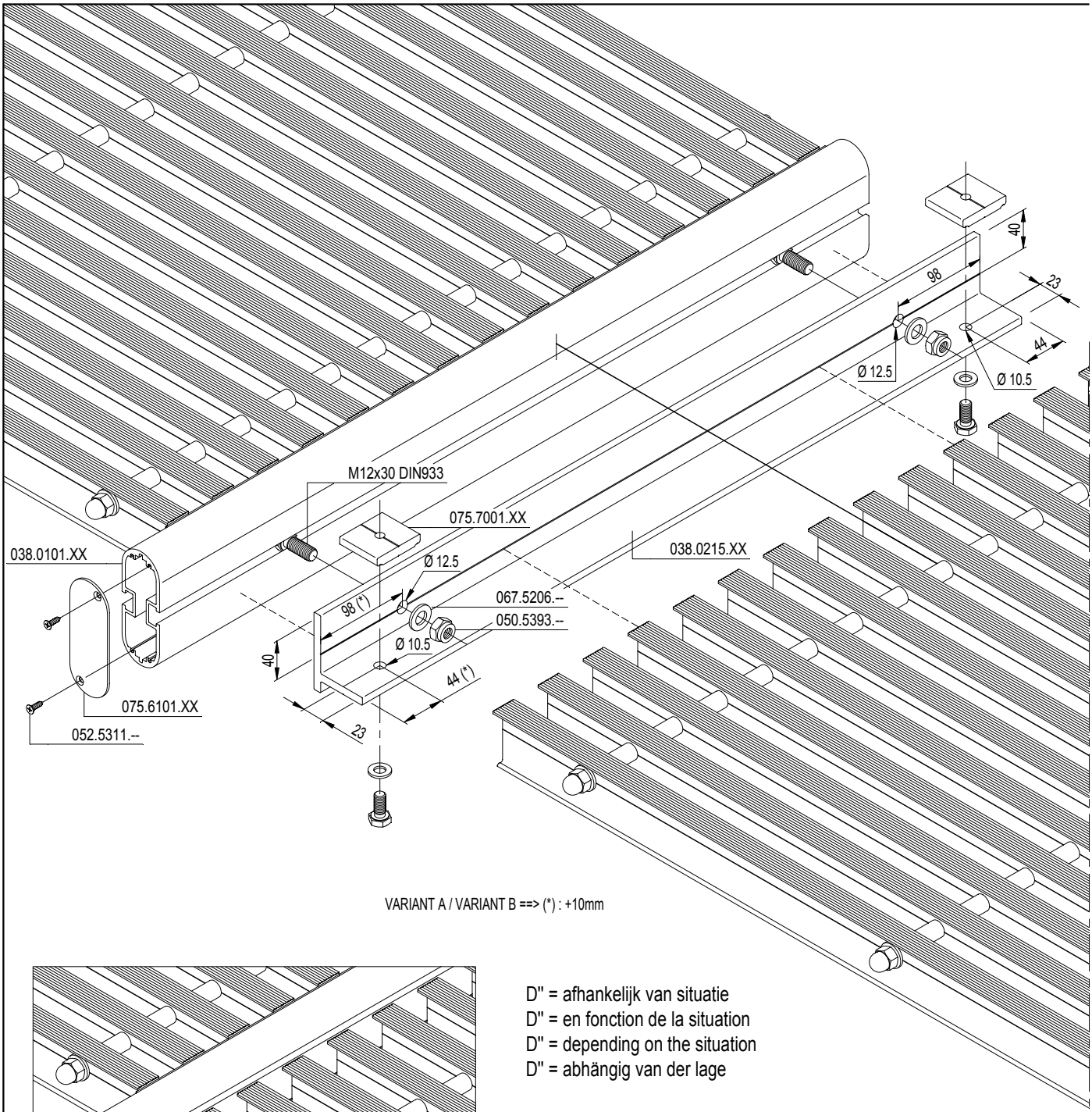

VARIANT A / VARIANT B ==> (*) : +10mm

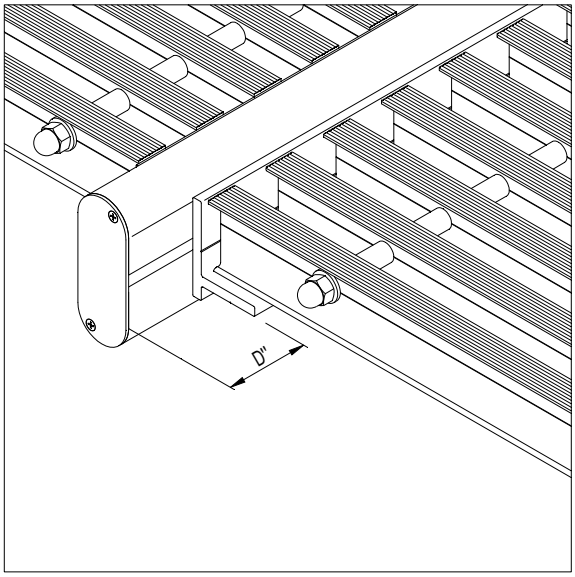

D" = afhankelijk van situatie
D" = en fonction de la situation
D" = depending on the situation
D" = abhängig van der lage

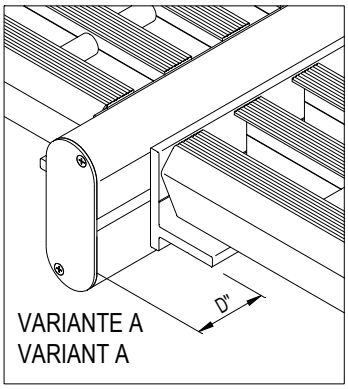

VARIANTE A
VARIANT A

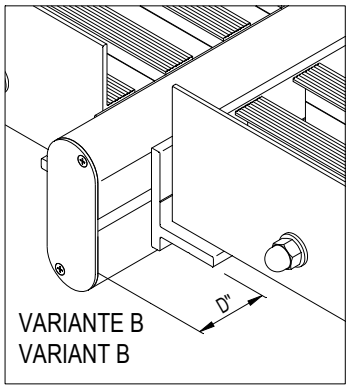

VARIANTE B
VARIANT B

D0061239

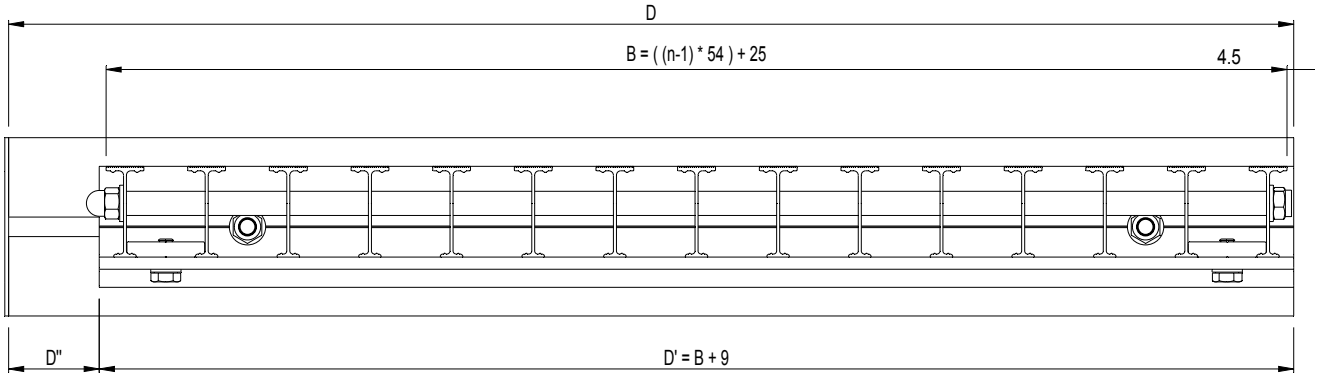

n = aantal profielen 038.0200.XX
n = nombre de profiles 038.0200.XX
n = number of profiles 038.0200.XX
n = anzahl profile 038.0200.XX

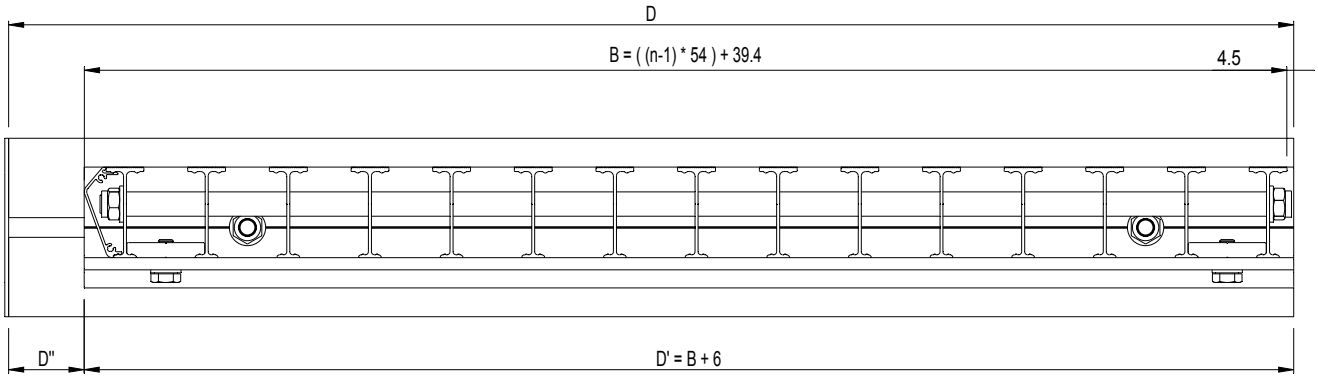

VARIANTE A
VARIANT A

n = aantal profielen 038.0200.XX
n = nombre de profiles 038.0200.XX
n = number of profiles 038.0200.XX
n = anzahl profile 038.0200.XX

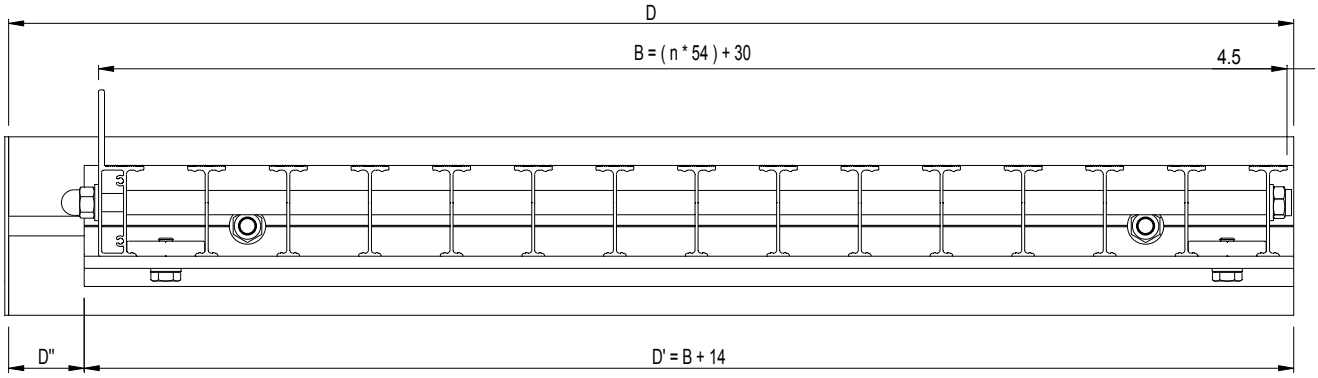

VARIANTE B
VARIANT B

n = aantal profielen 038.0200.XX
n = nombre de profiles 038.0200.XX
n = number of profiles 038.0200.XX
n = anzahl profile 038.0200.XX

D0061239

MONTAGE LOOPROOSTER
MONTAGE CAILLEBOTIS
ASSEMBLY WALKWAY
MONTAGE LAUFROST

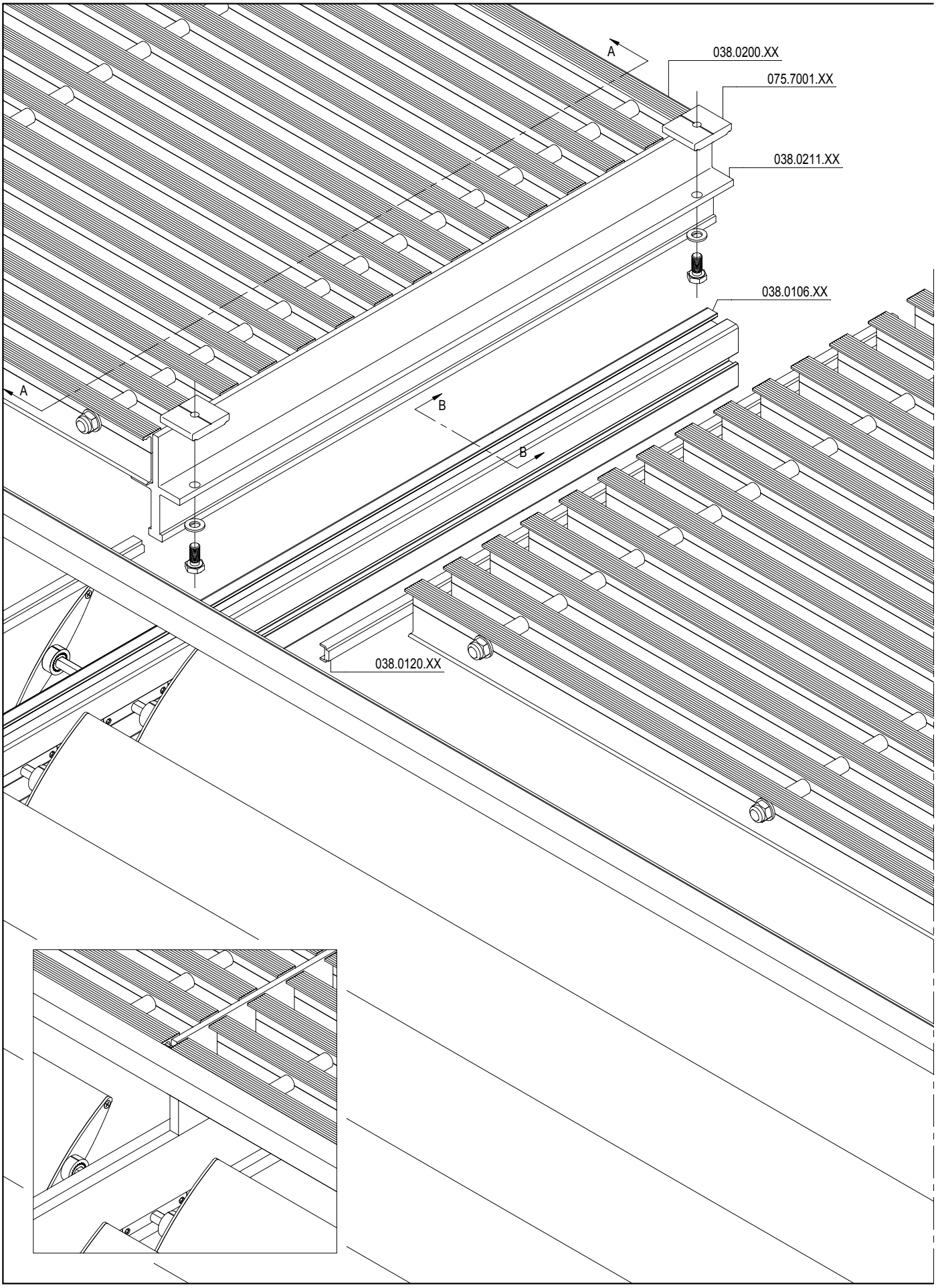

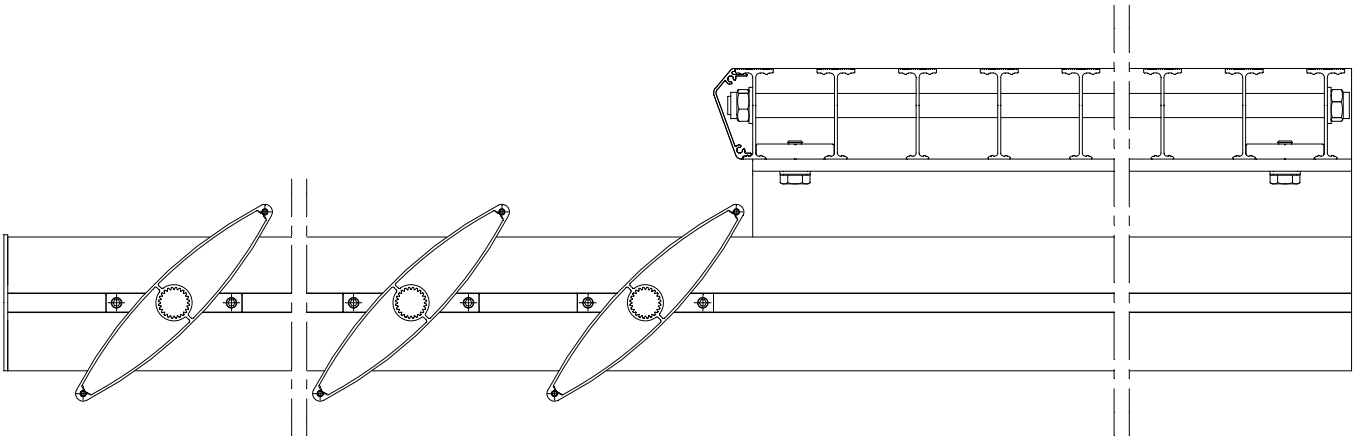

SECTION A - A

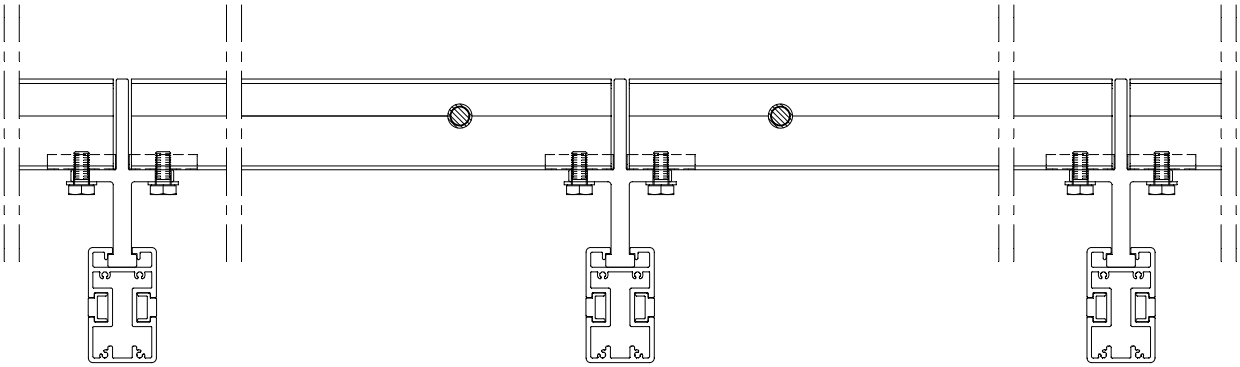

SECTION B - B

MONTAGE LOOPROOSTER
MONTAGE CAILLEBOTIS
ASSEMBLY WALKWAY
MONTAGE LAUFROST

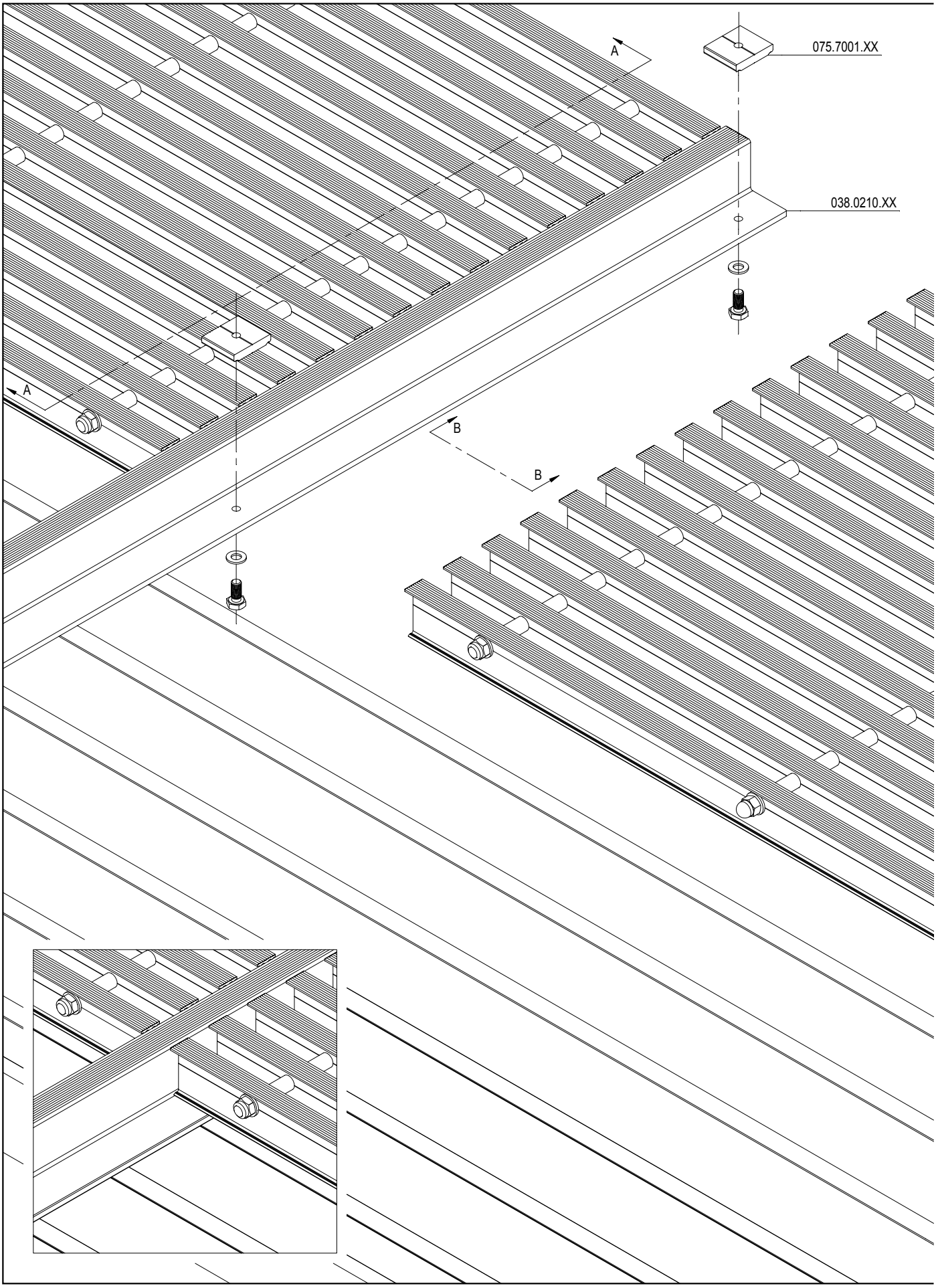

MONTAGE LOOPROOSTER
MONTAGE CAILLEBOTIS
ASSEMBLY WALKWAY
MONTAGE LAUFROST

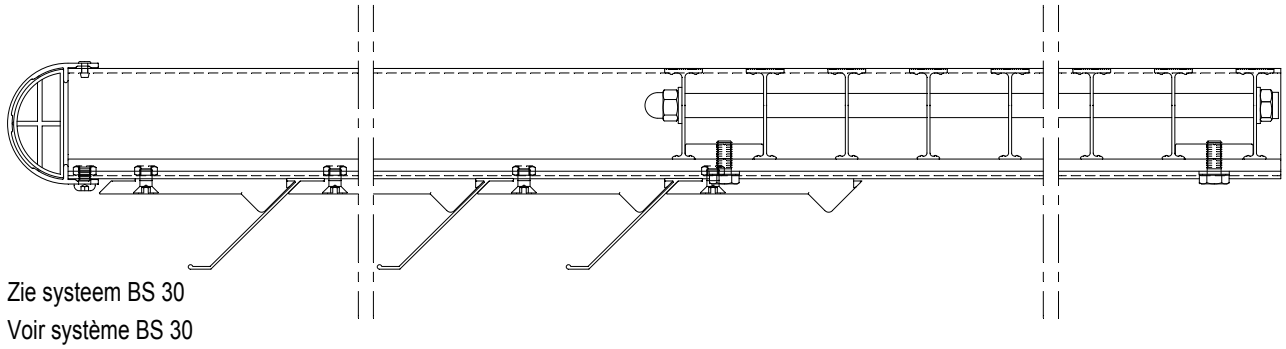

Zie systeem BS 30
Voir système BS 30
See system BS 30
Siehe system BS 30

SECTION A - A

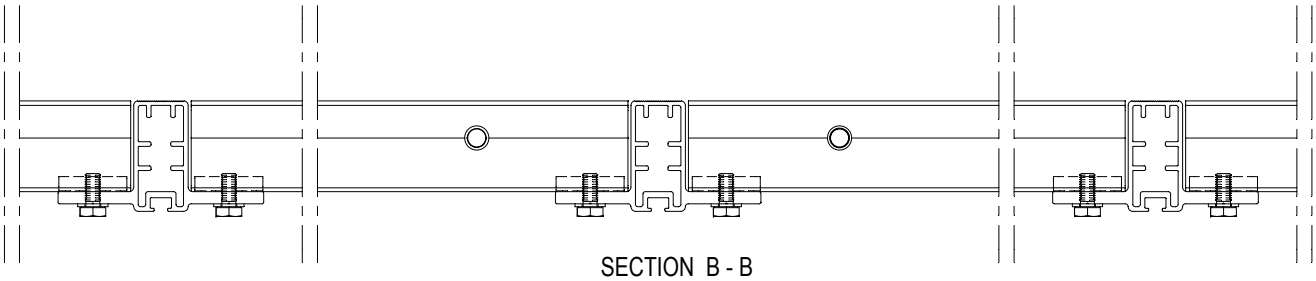

SECTION B - B

Algemene opmerking :

Elke typische situatie en specifiek project dient door een officiële stuctureel ingenieur berekend/bekrachtigd te worden.

General remark :

Every typical situation and specific project has to be calculated / validated by an official structural engineer.

Remarque générale :

Chaque situation typique et projet spécifique doit être calculé/validé par un ingénieur structurel officiel.

Allgemeine Anmerkung :

Jede typische Situation und spezifisches Projekt soll von einem offiziellen strukturellen Ingenieur berechnet bekräftigt werden.

F

D0061241

MONTAGE ANKERS
ASSEMBLAGE ANCRAGES
ASSEMBLY FIXING LUGS
MONTAGE ANKER

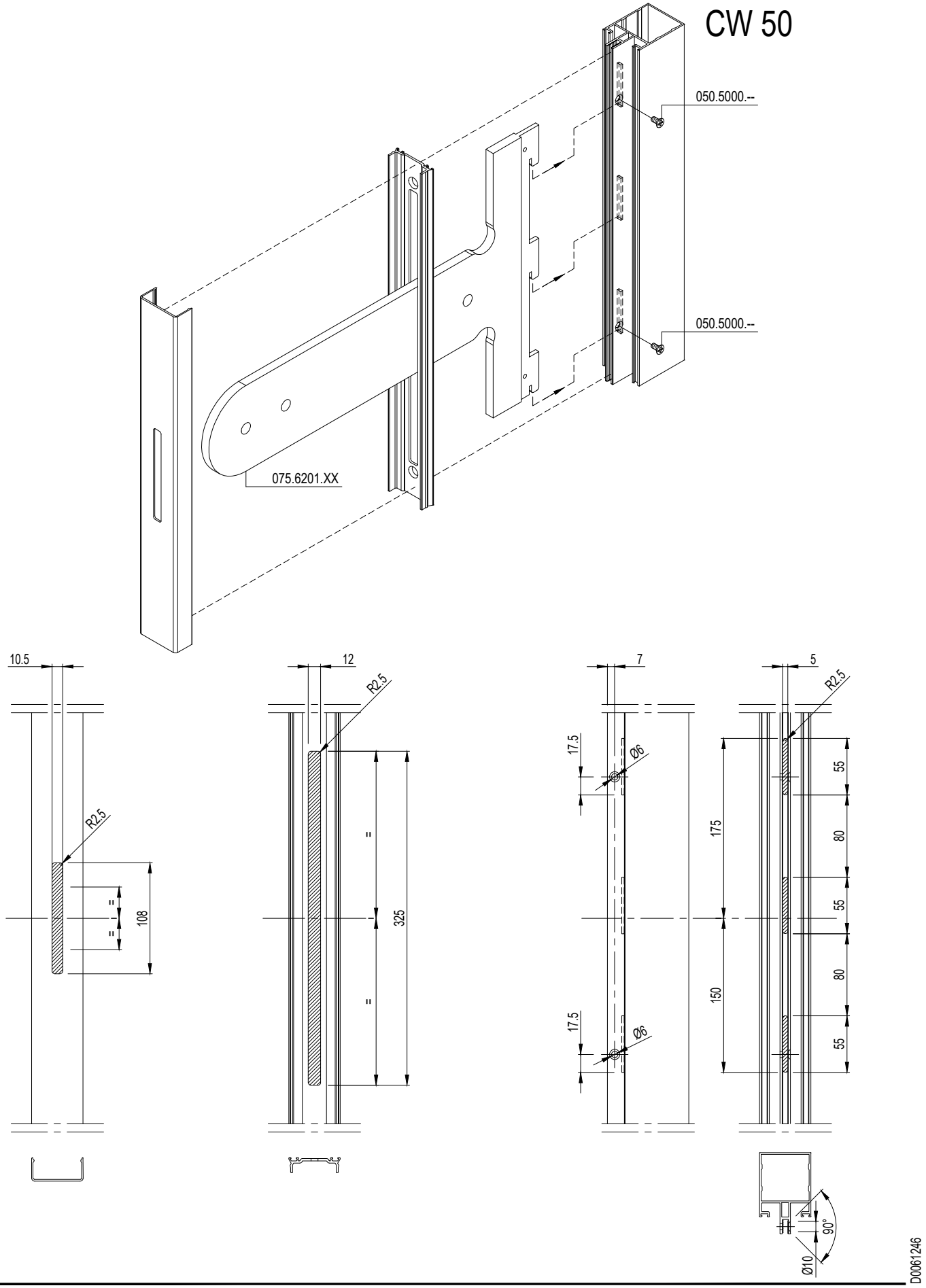

MONTAGE ANKERS
ASSEMBLAGE ANCRAGES
ASSEMBLY FIXING LUGS
MONTAGE ANKER

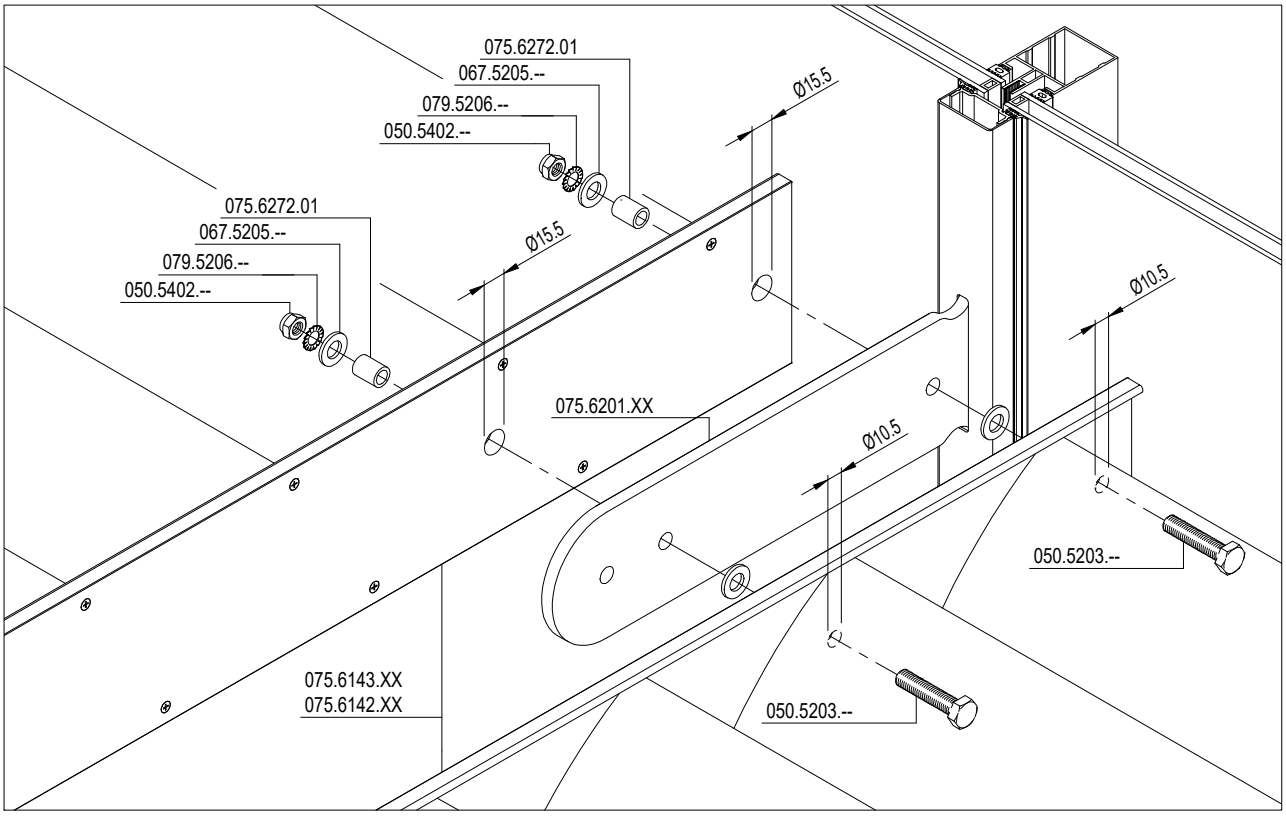

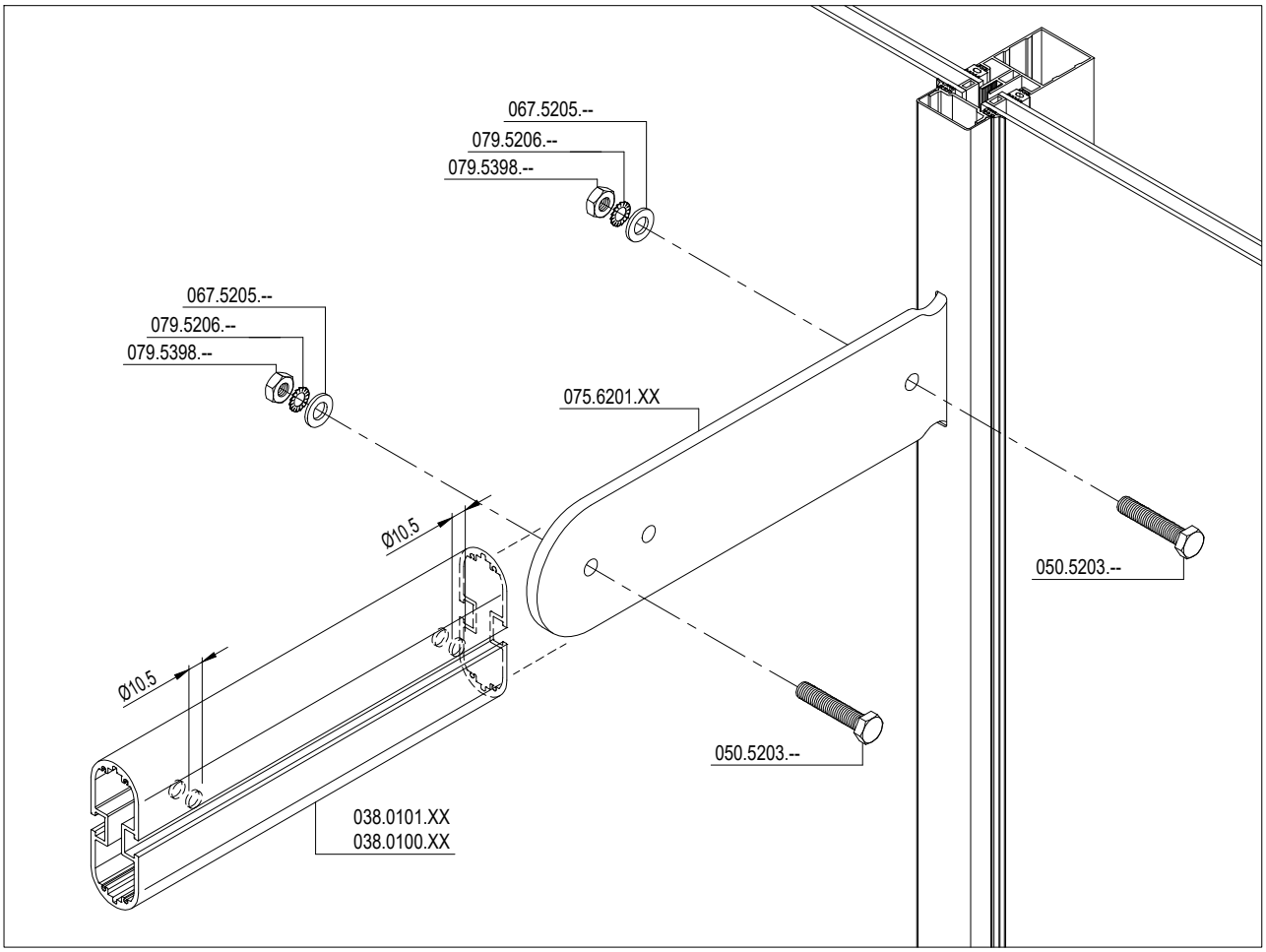

F

D0061246

MONTAGE ANKERS
ASSEMBLAGE ANCRAGES
ASSEMBLY FIXING LUGS
MONTAGE ANKER

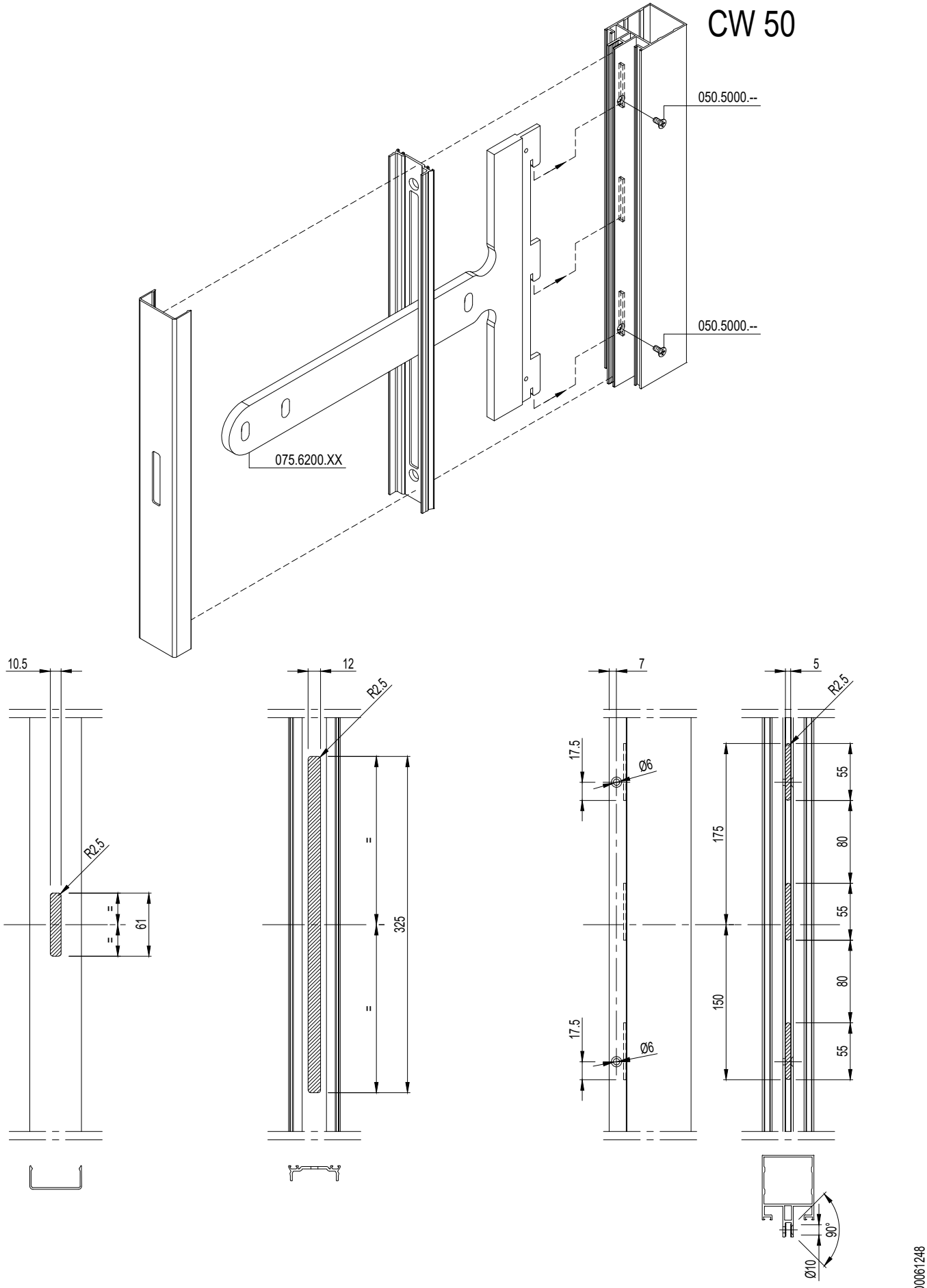

MONTAGE ANKERS
ASSEMBLAGE ANCRAGES
ASSEMBLY FIXING LUGS
MONTAGE ANKER

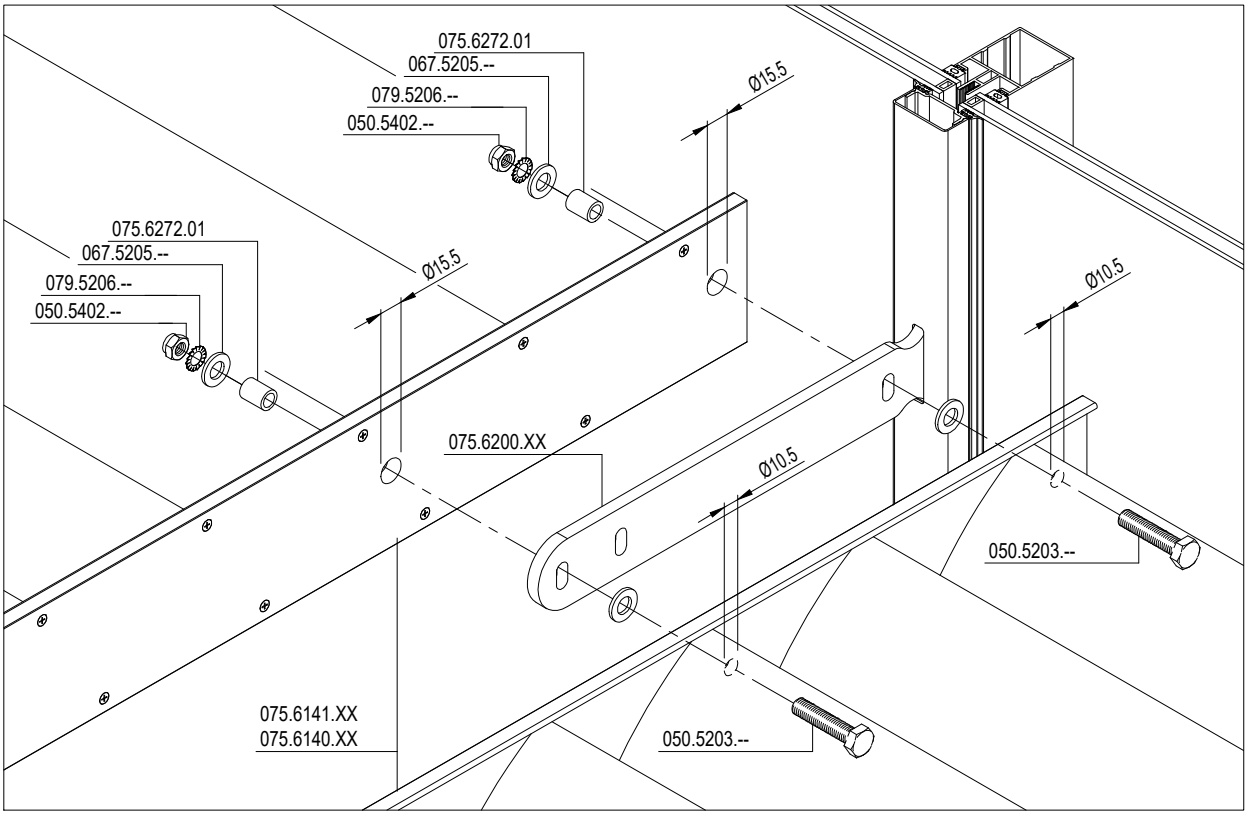

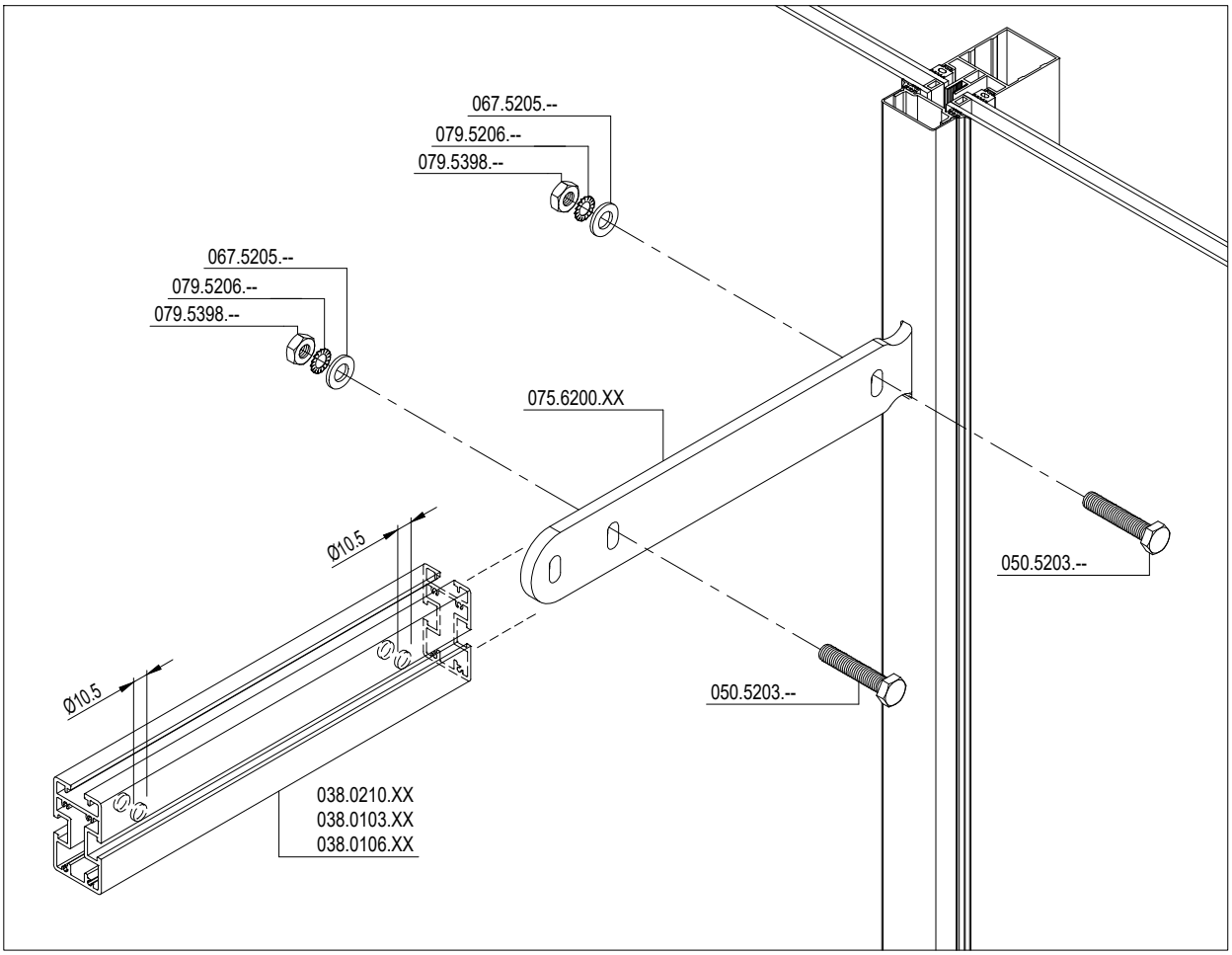

D0061248

F

MONTAGE ANKERS
ASSEMBLAGE ANCRAGES
ASSEMBLY FIXING LUGS
MONTAGE ANKER

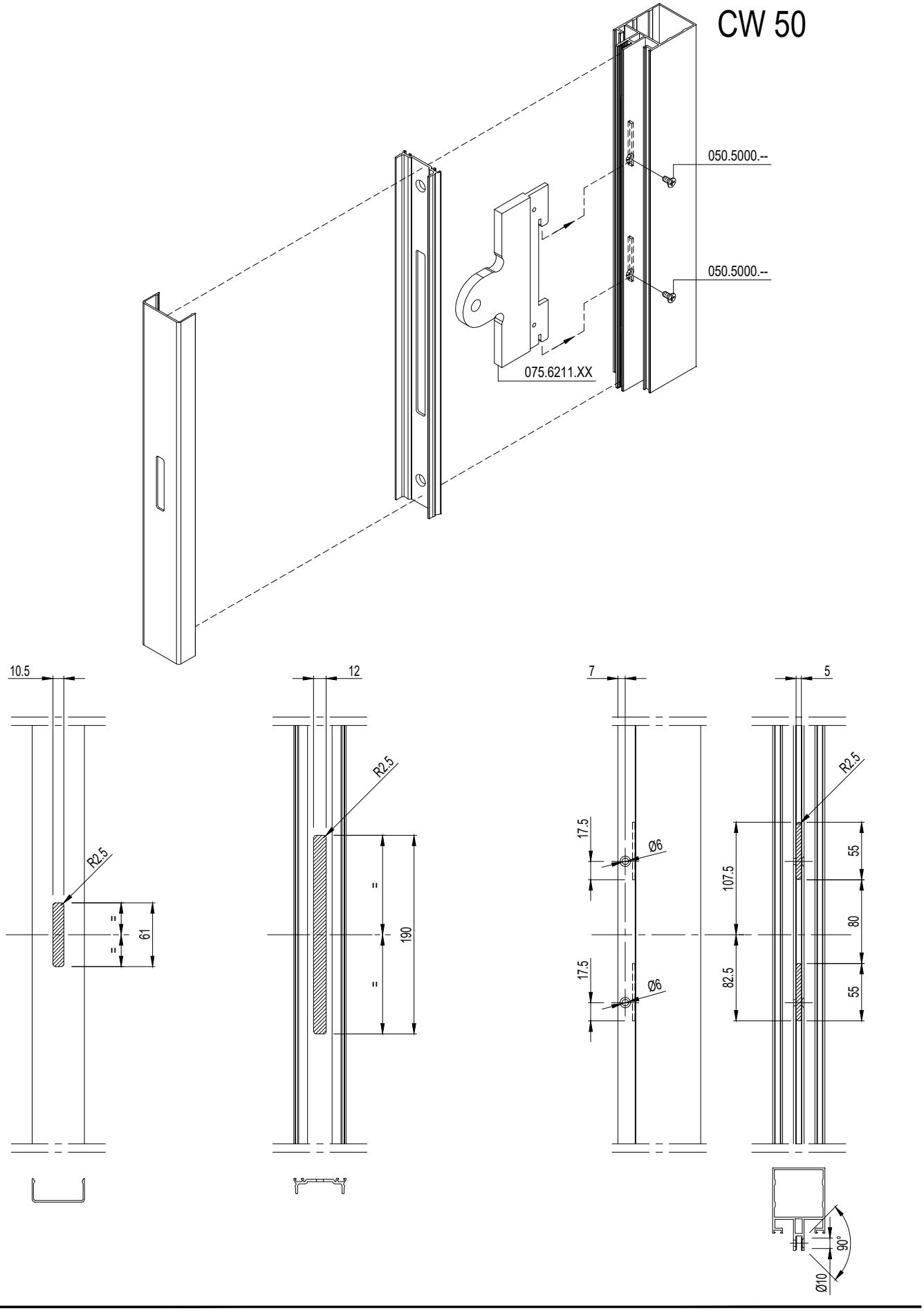

MONTAGE ANKERS
ASSEMBLAGE ANCRAGES
ASSEMBLY FIXING LUGS
MONTAGE ANKER

VARIANTE
VARIANT

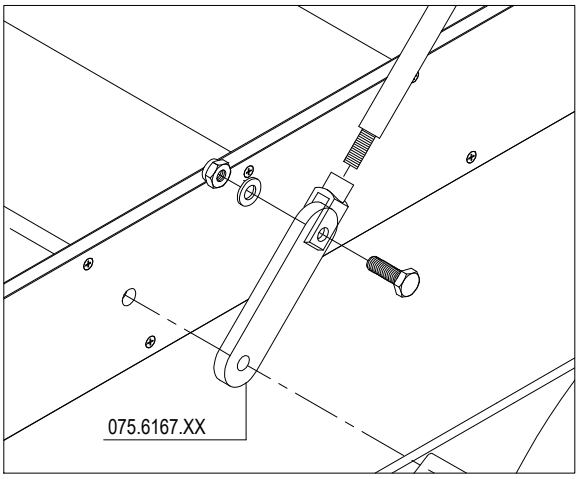

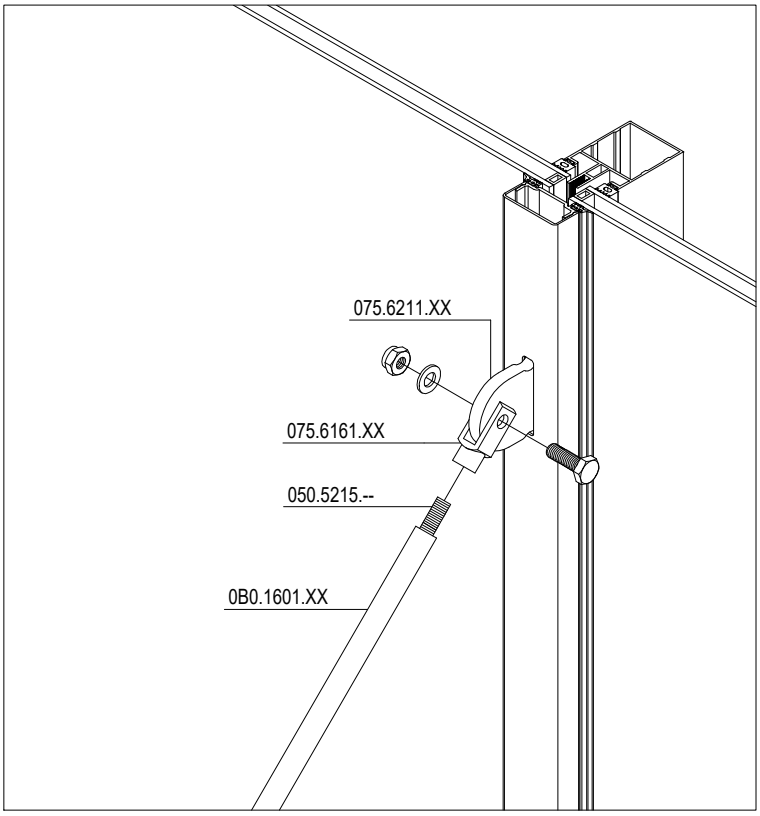

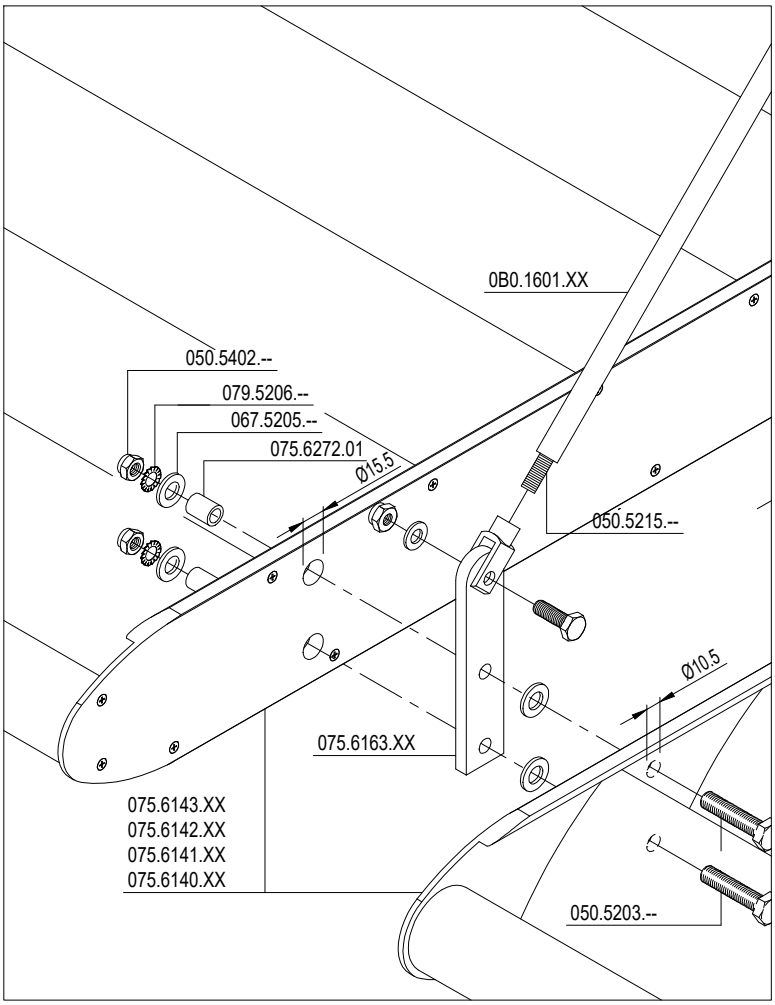

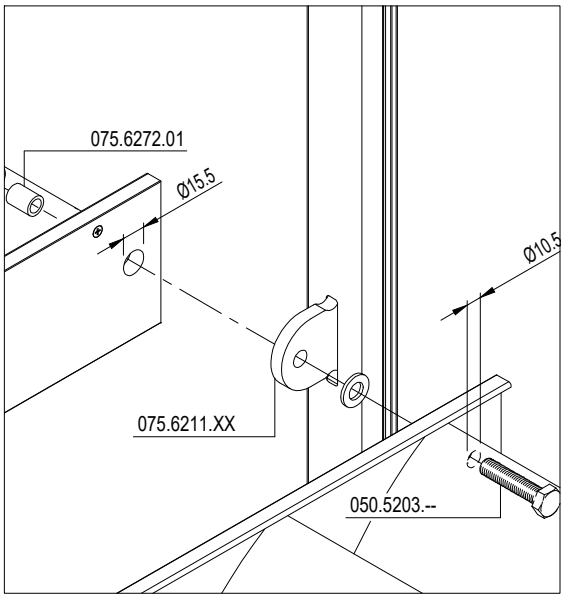

D0061249

F

CW 86

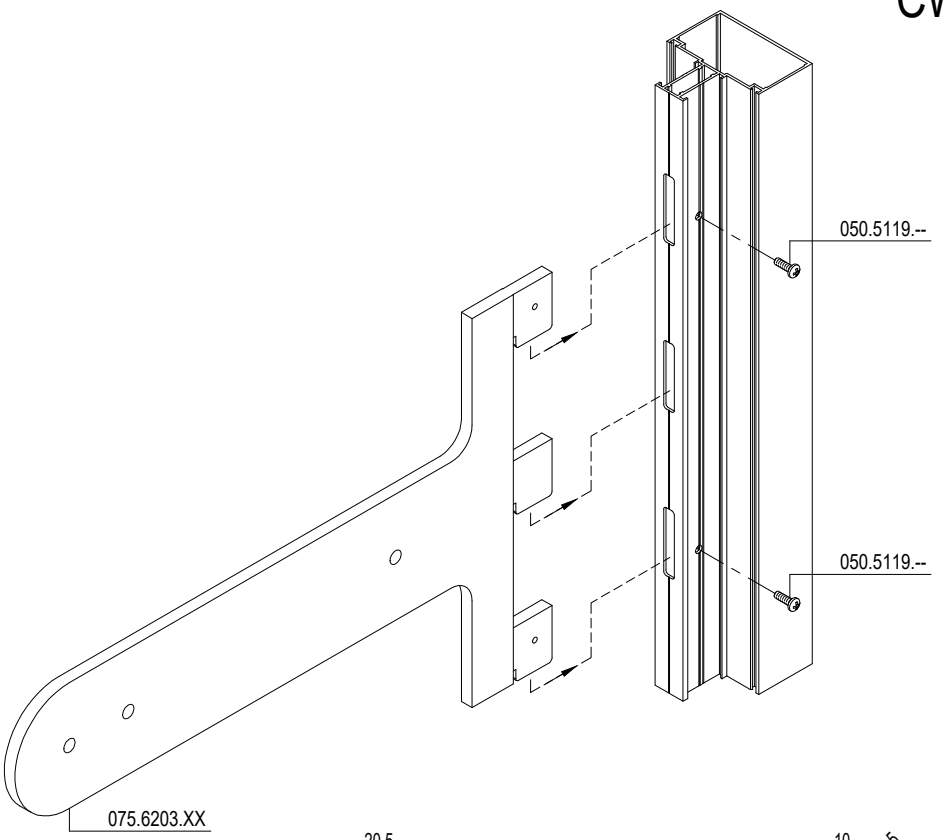

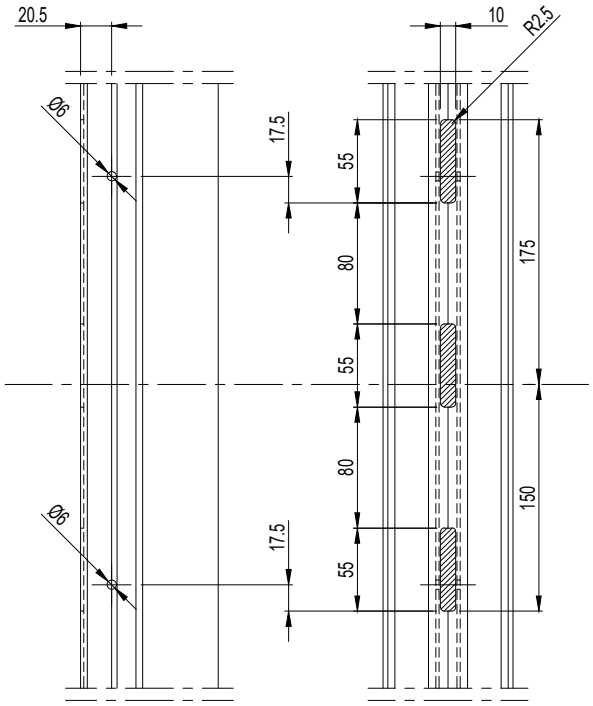

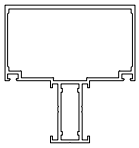

D0061250

MONTAGE ANKERS
ASSEMBLAGE ANCRAGES
ASSEMBLY FIXING LUGS
MONTAGE ANKER

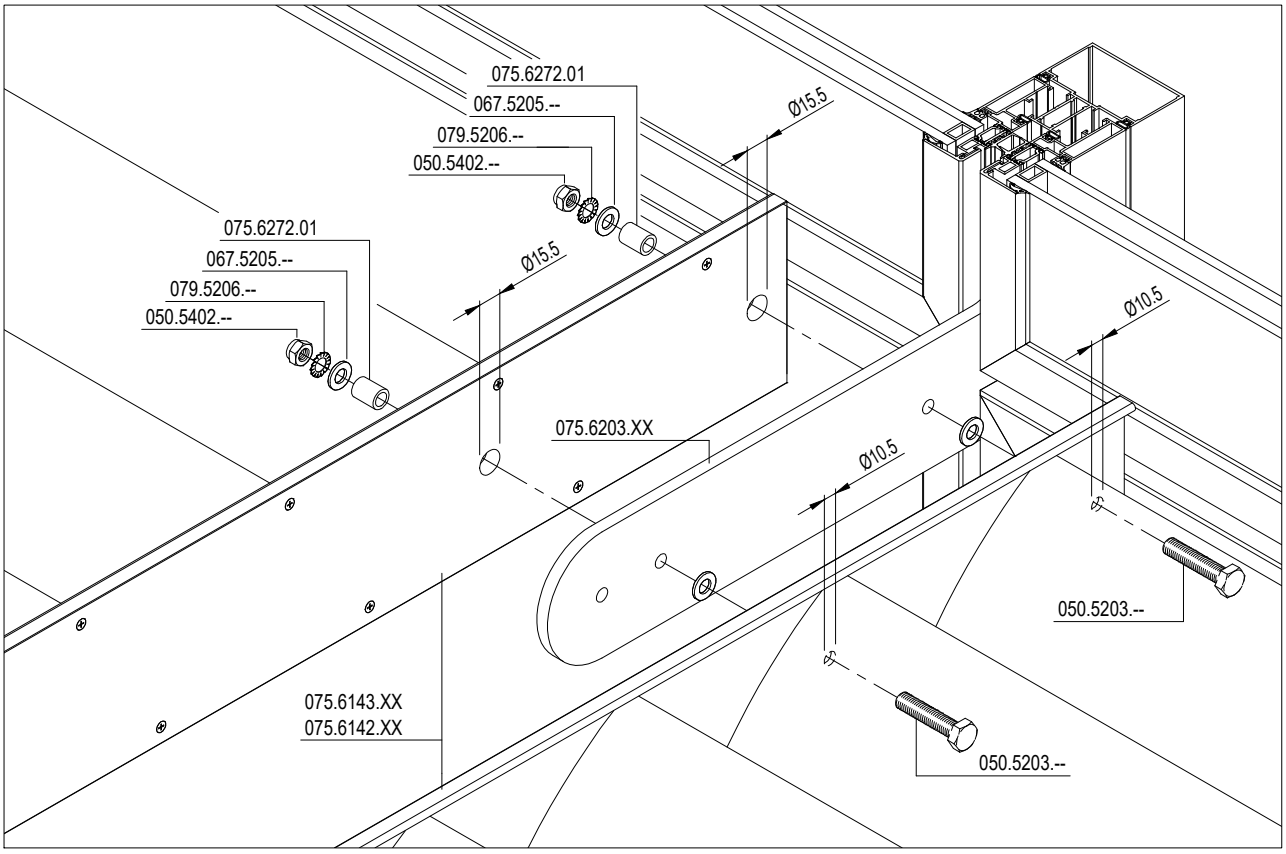

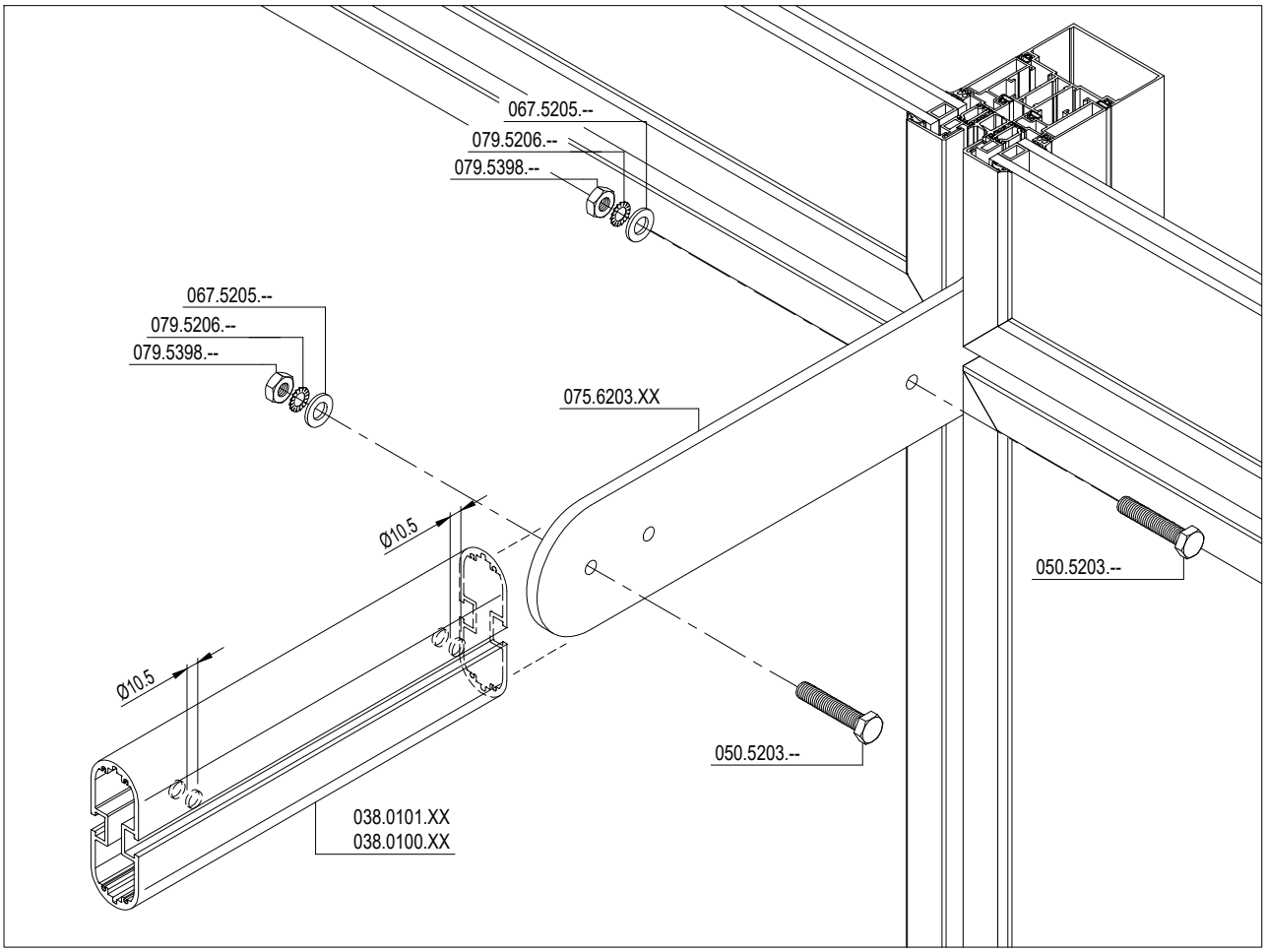

F

D0061250

MONTAGE ANKERS
ASSEMBLAGE ANCRAGES
ASSEMBLY FIXING LUGS
MONTAGE ANKER

CW 86

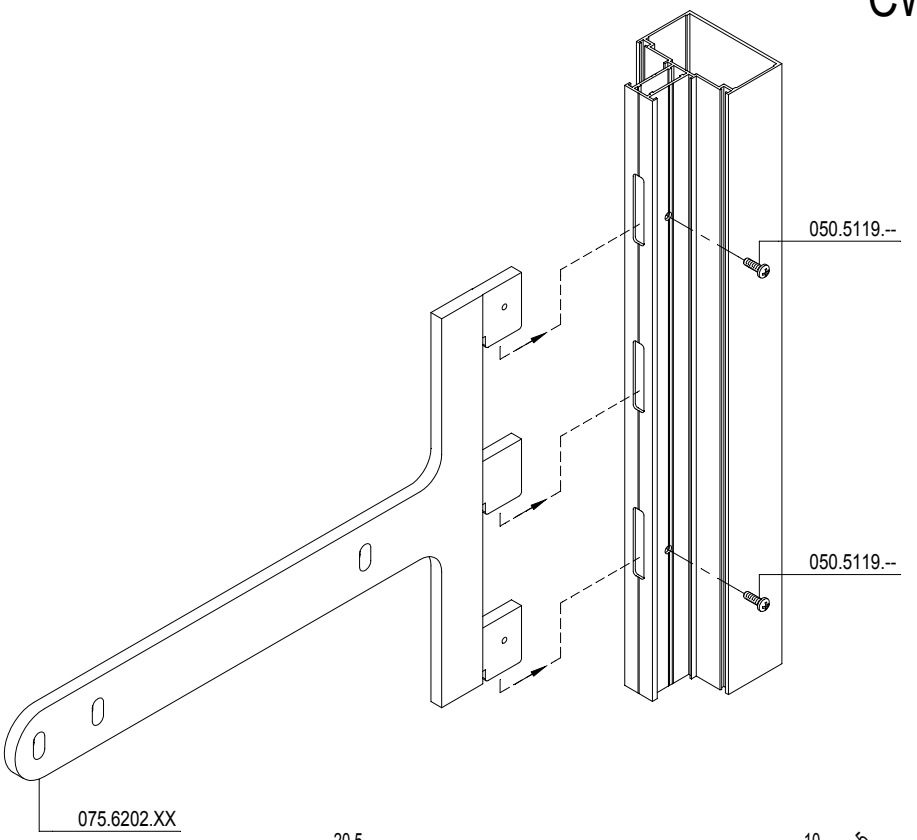

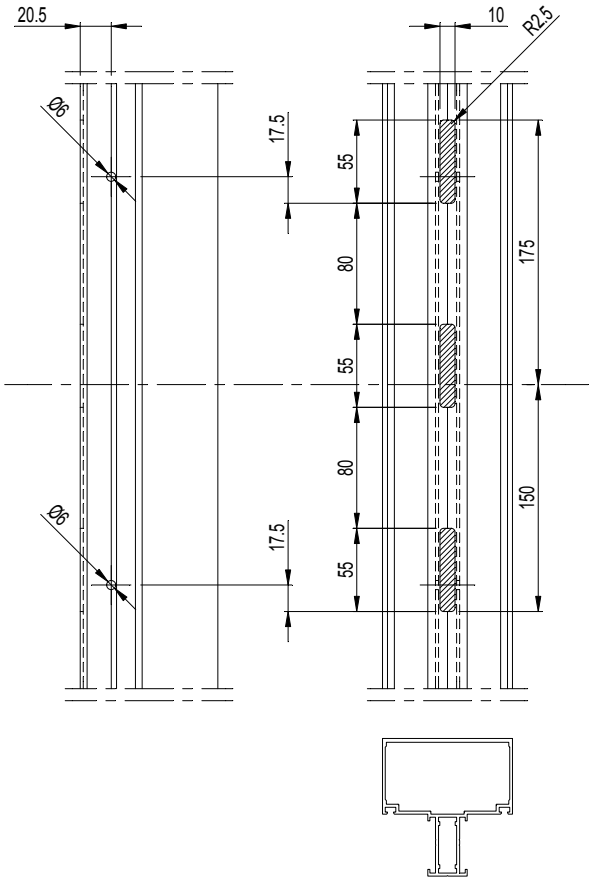

F

D0061254

MONTAGE ANKERS
ASSEMBLAGE ANCRAGES
ASSEMBLY FIXING LUGS
MONTAGE ANKER

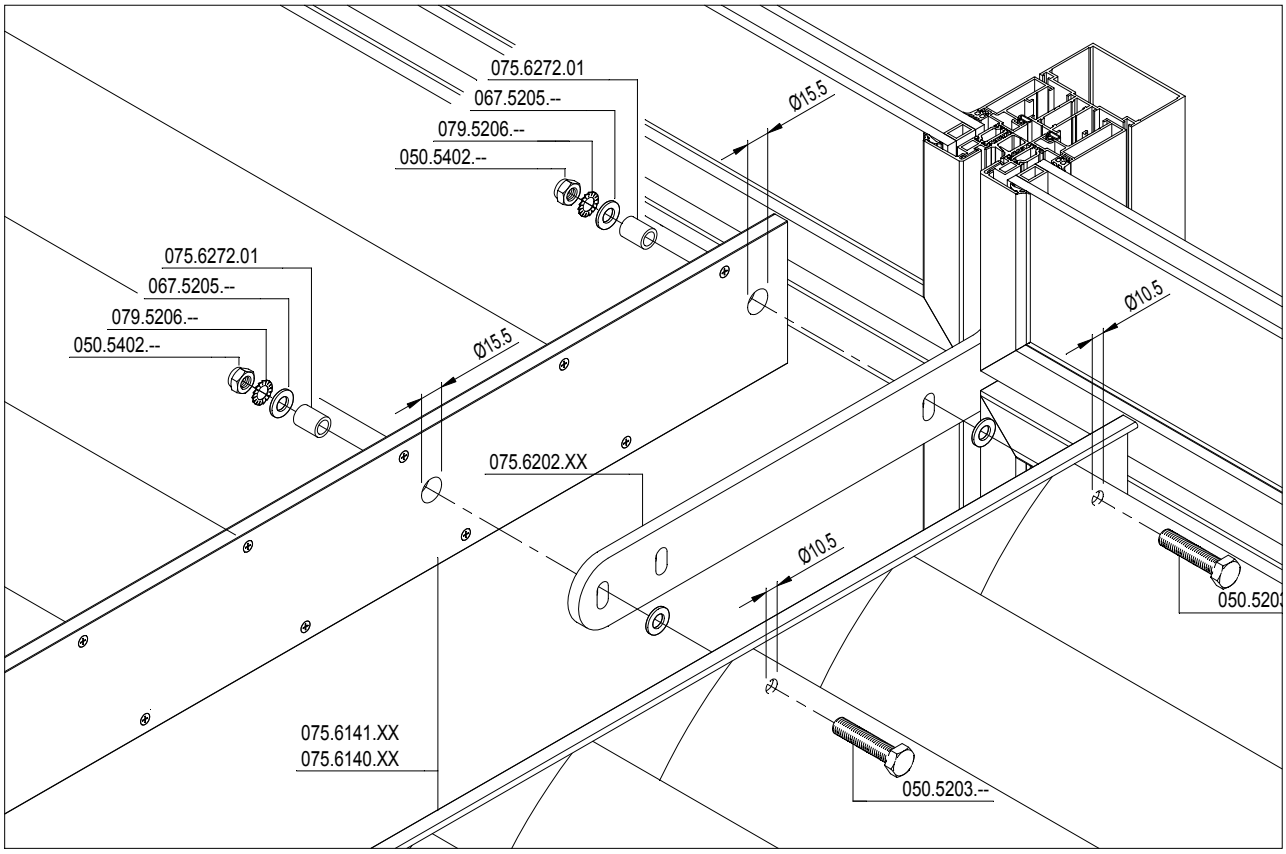

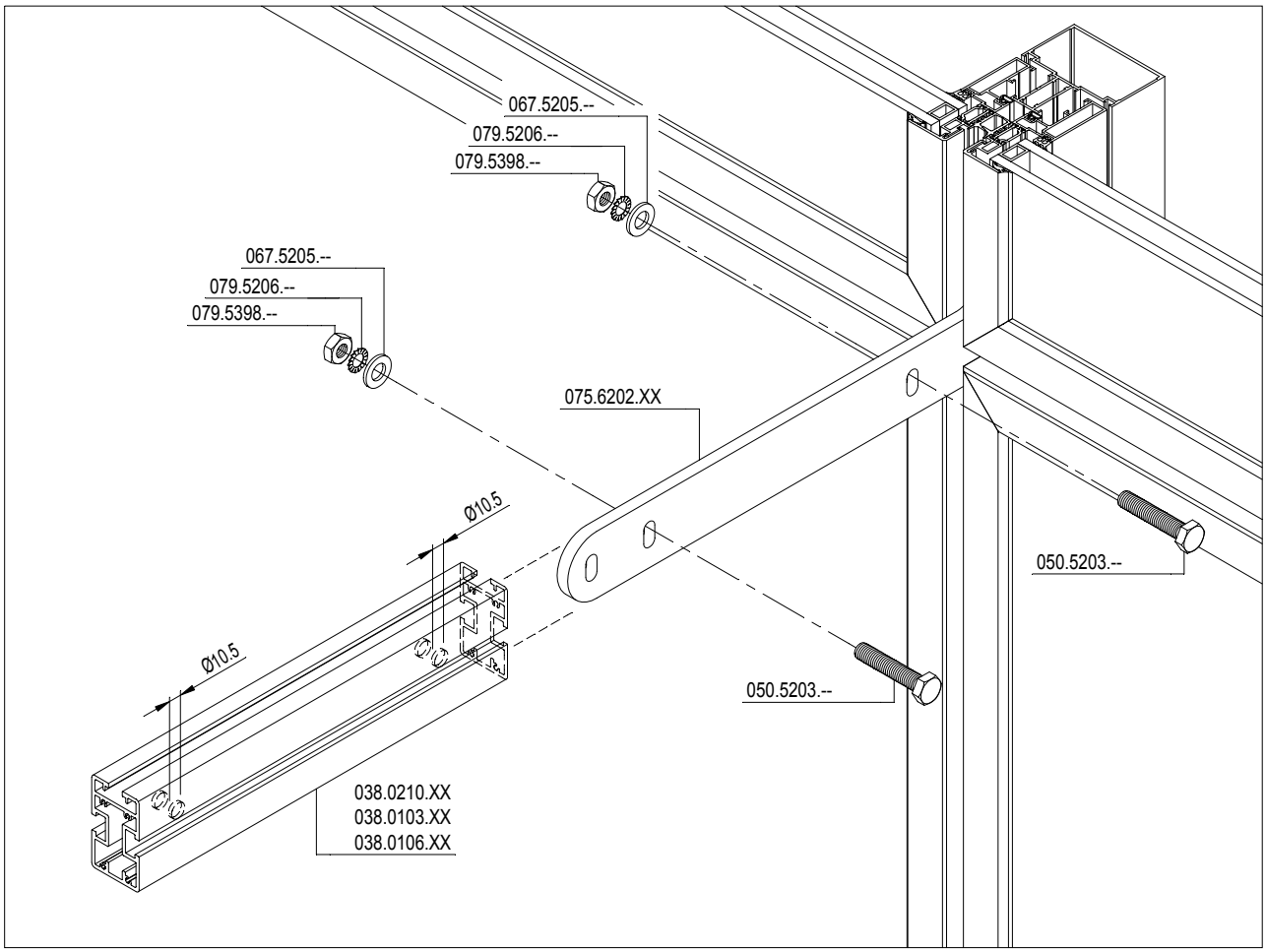

F

D0061254

CW 86

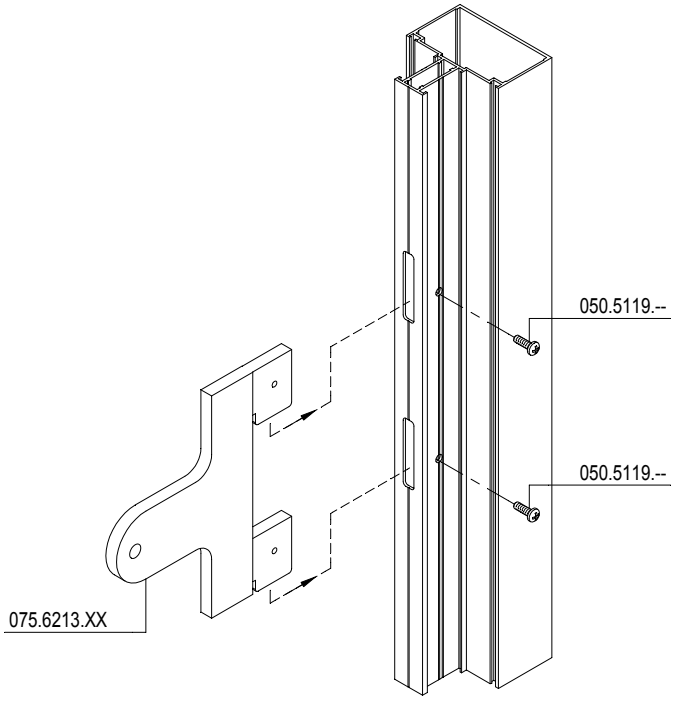

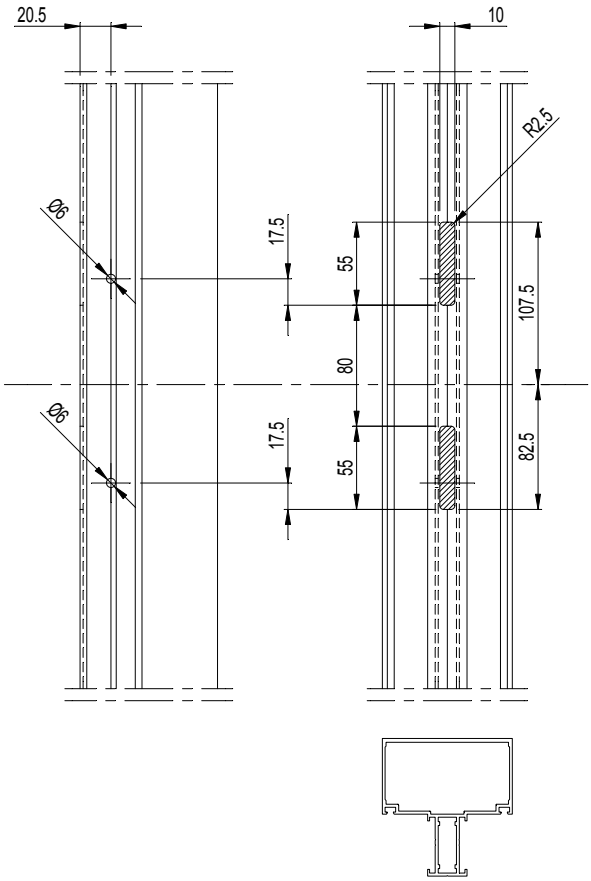

F

D0061255

MONTAGE ANKERS
ASSEMBLAGE ANCRAGES
ASSEMBLY FIXING LUGS
MONTAGE ANKER

VARIANTE
VARIANT

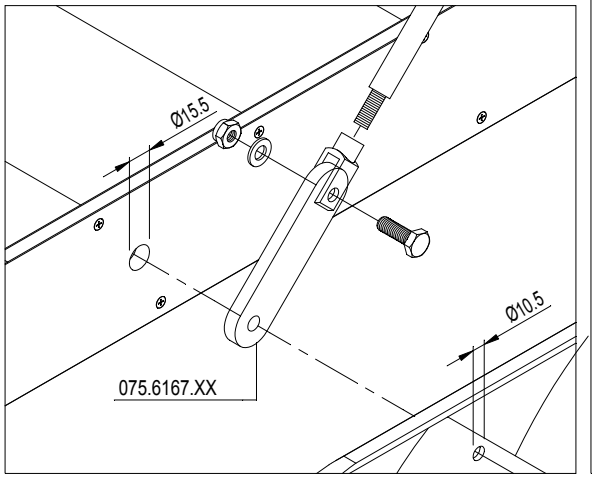

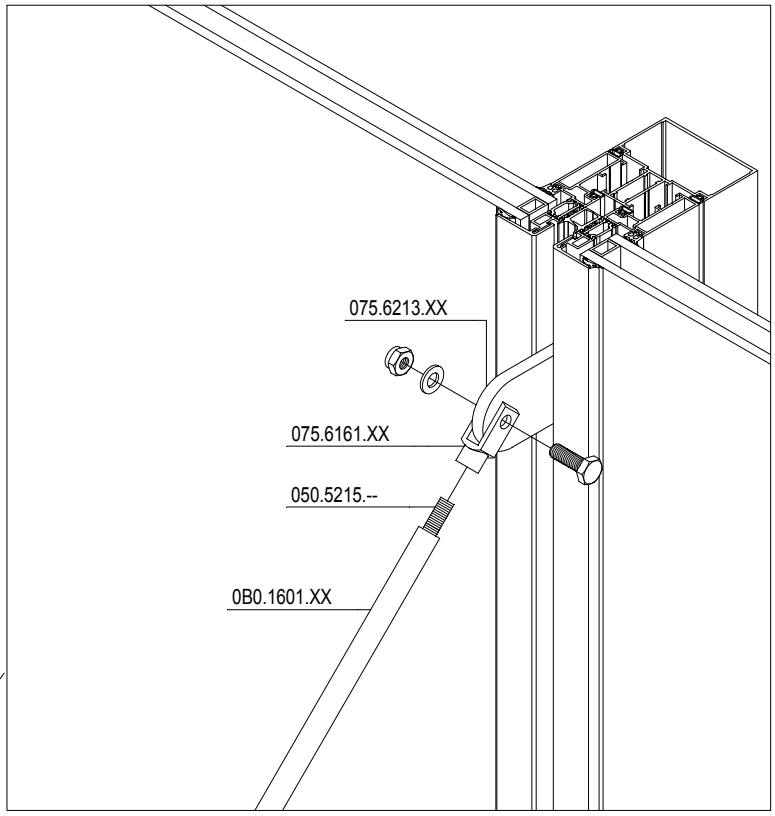

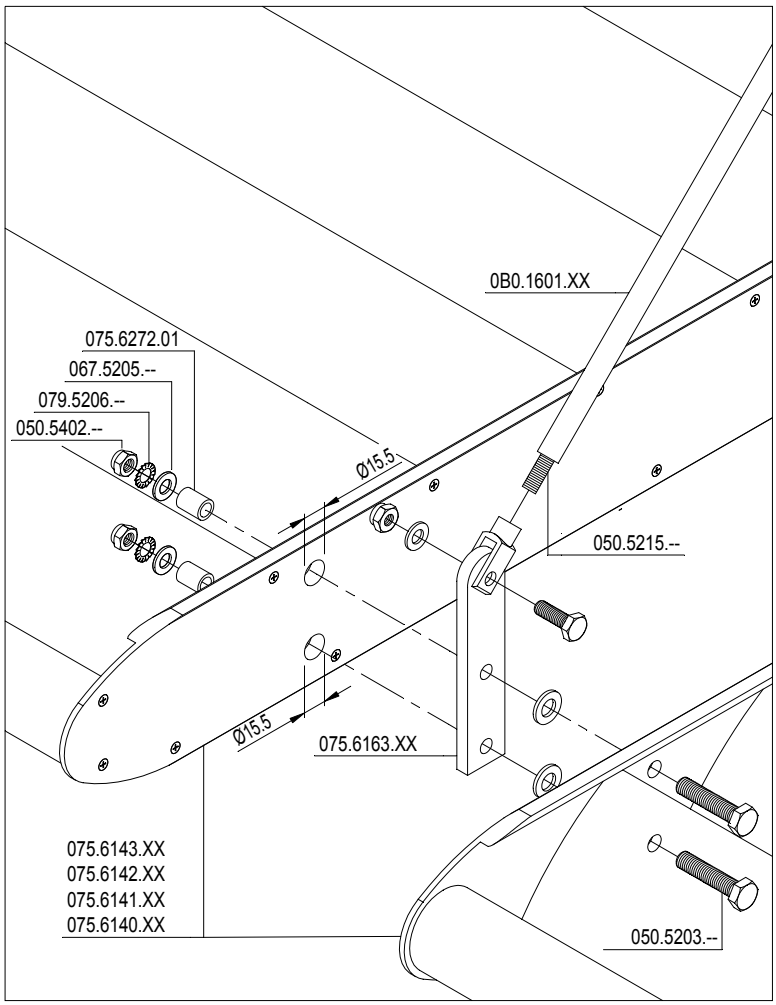

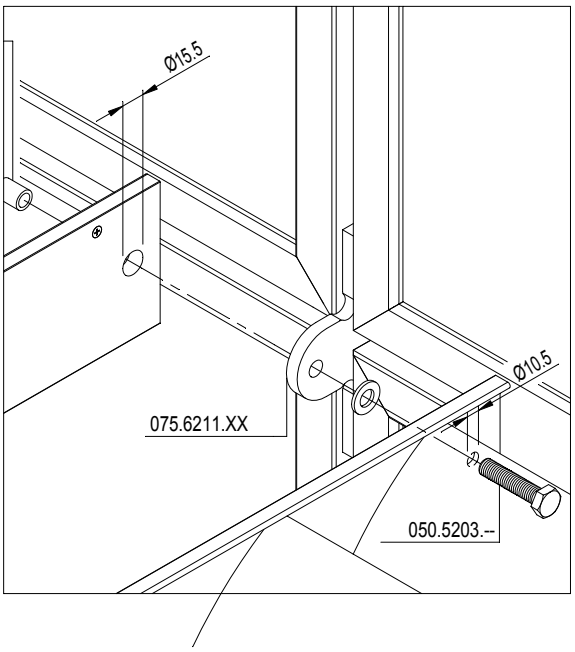

F

D0061255

MONTAGE DRAADSTANG
ASSEMBLAGE BARRE FILETEE
ASSEMBLY THREADED ROD
MONTAGE GEWINDESTANGE

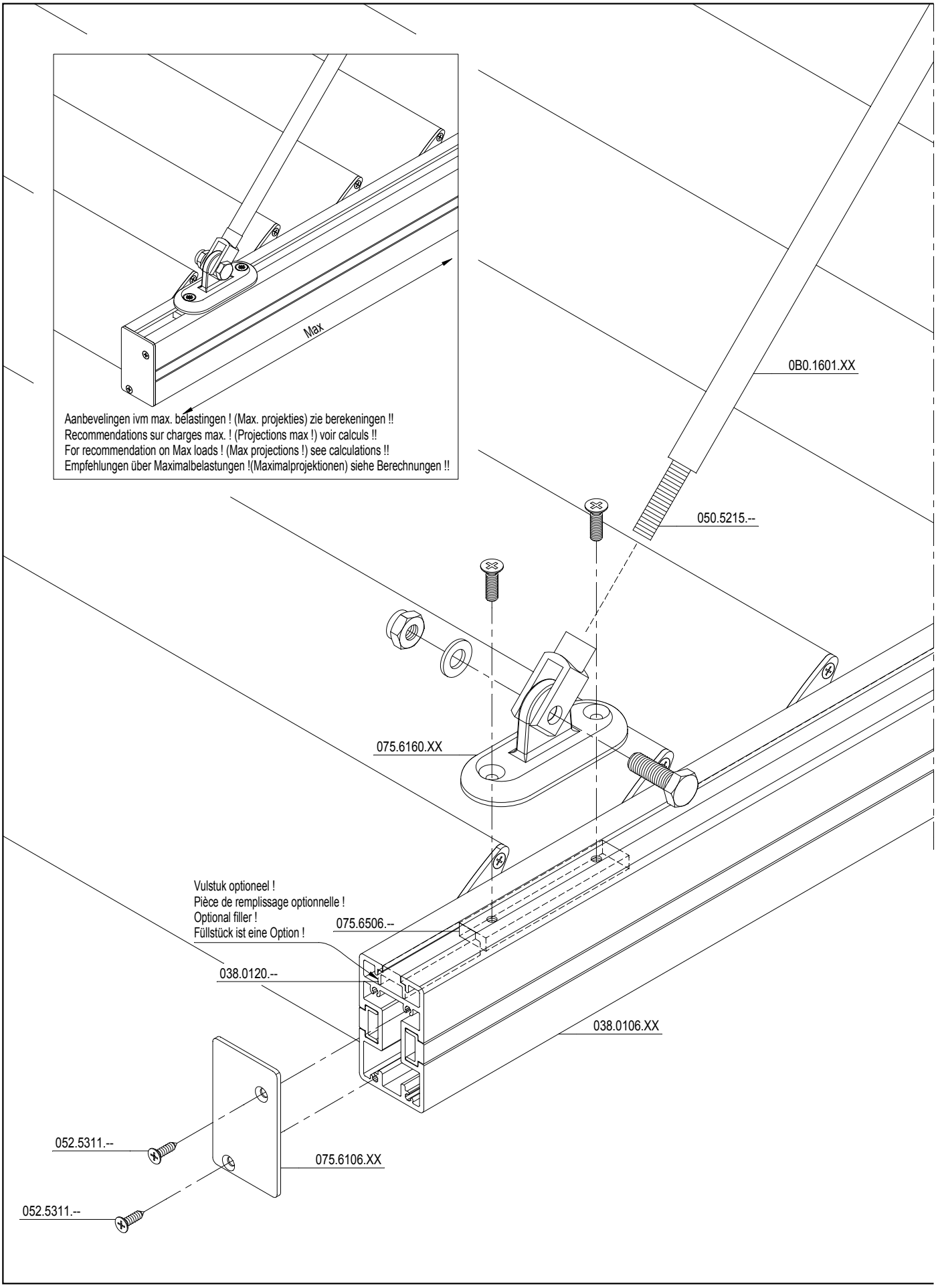

F

MONTAGE DRAADSTANG
ASSEMBLAGE BARRE FILETEE
ASSEMBLY THREADED ROD
MONTAGE GEWINDESTANGE

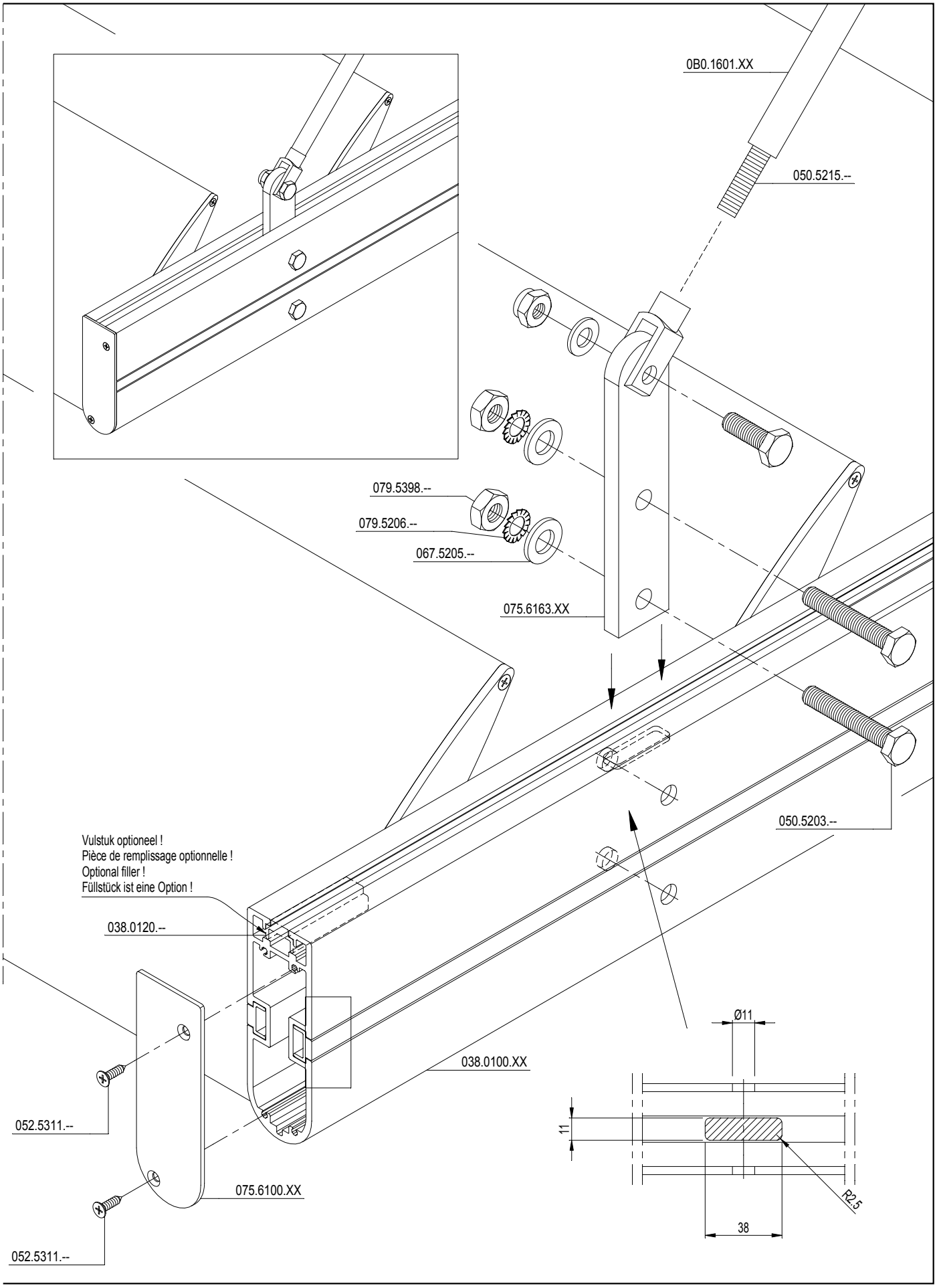

MONTAGE MUURANKER
ASSEMBLAGE ANCRE
ASSEMBLY WALL BRACKET
MONTAGE MAUERANKER

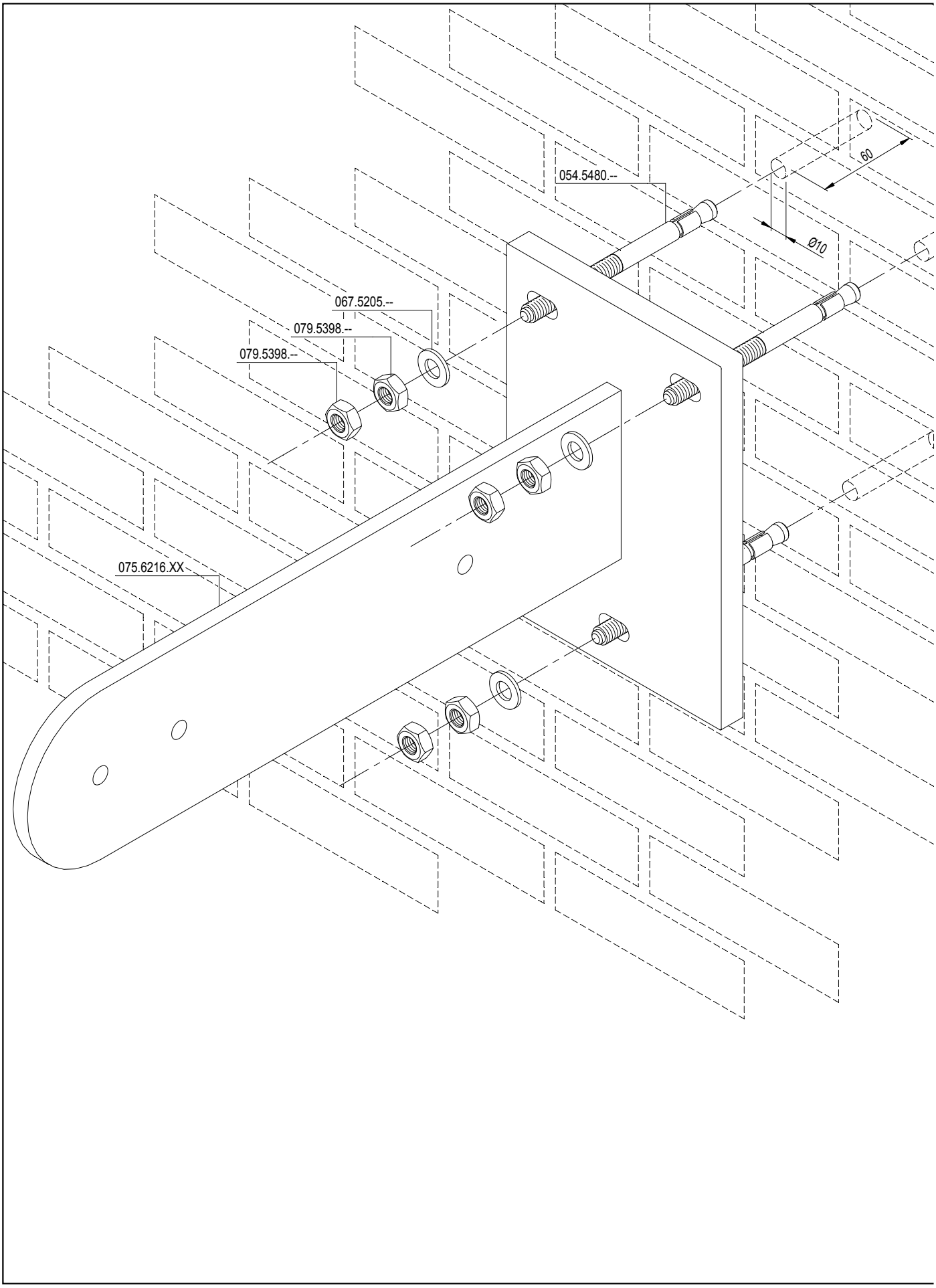

MONTAGE MUURANKER
ASSEMBLAGE ANCRE
ASSEMBLY WALL BRACKET
MONTAGE MAUERANKER

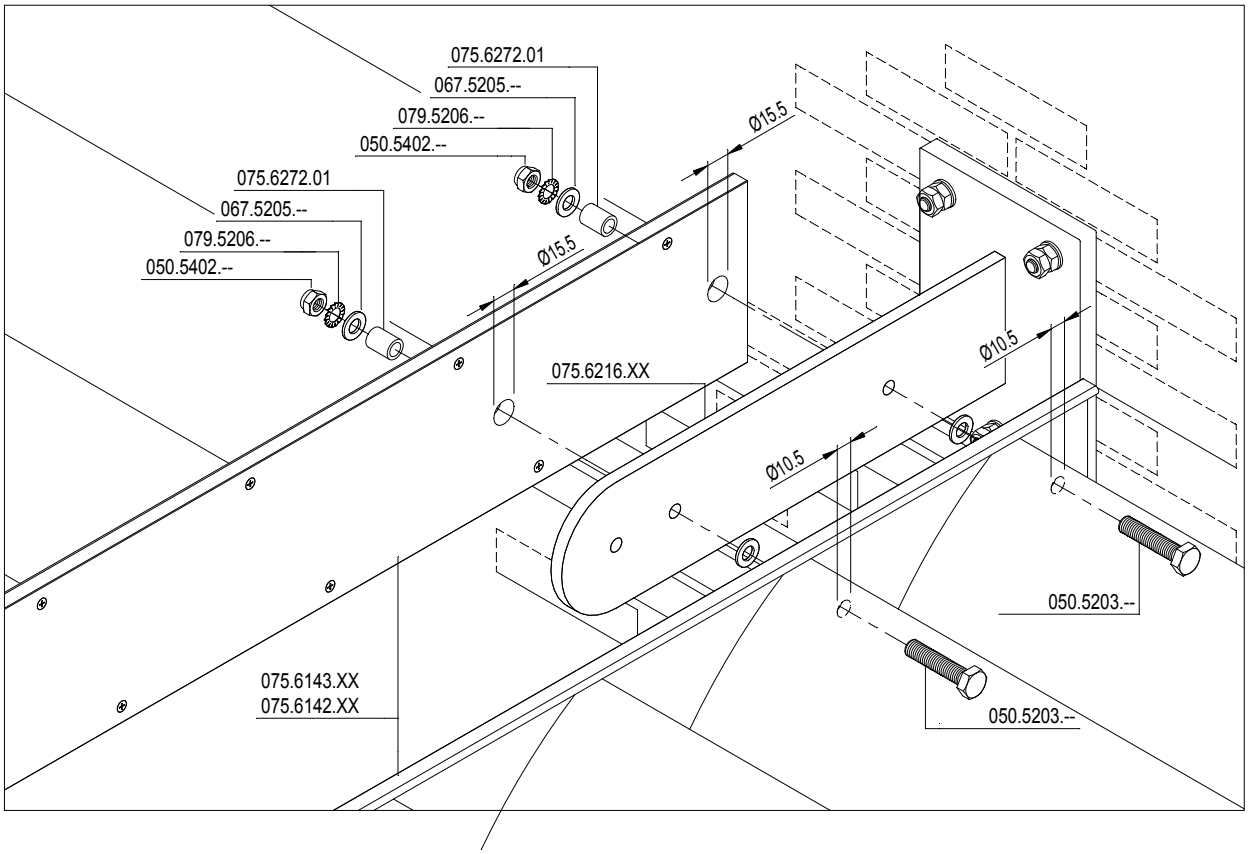

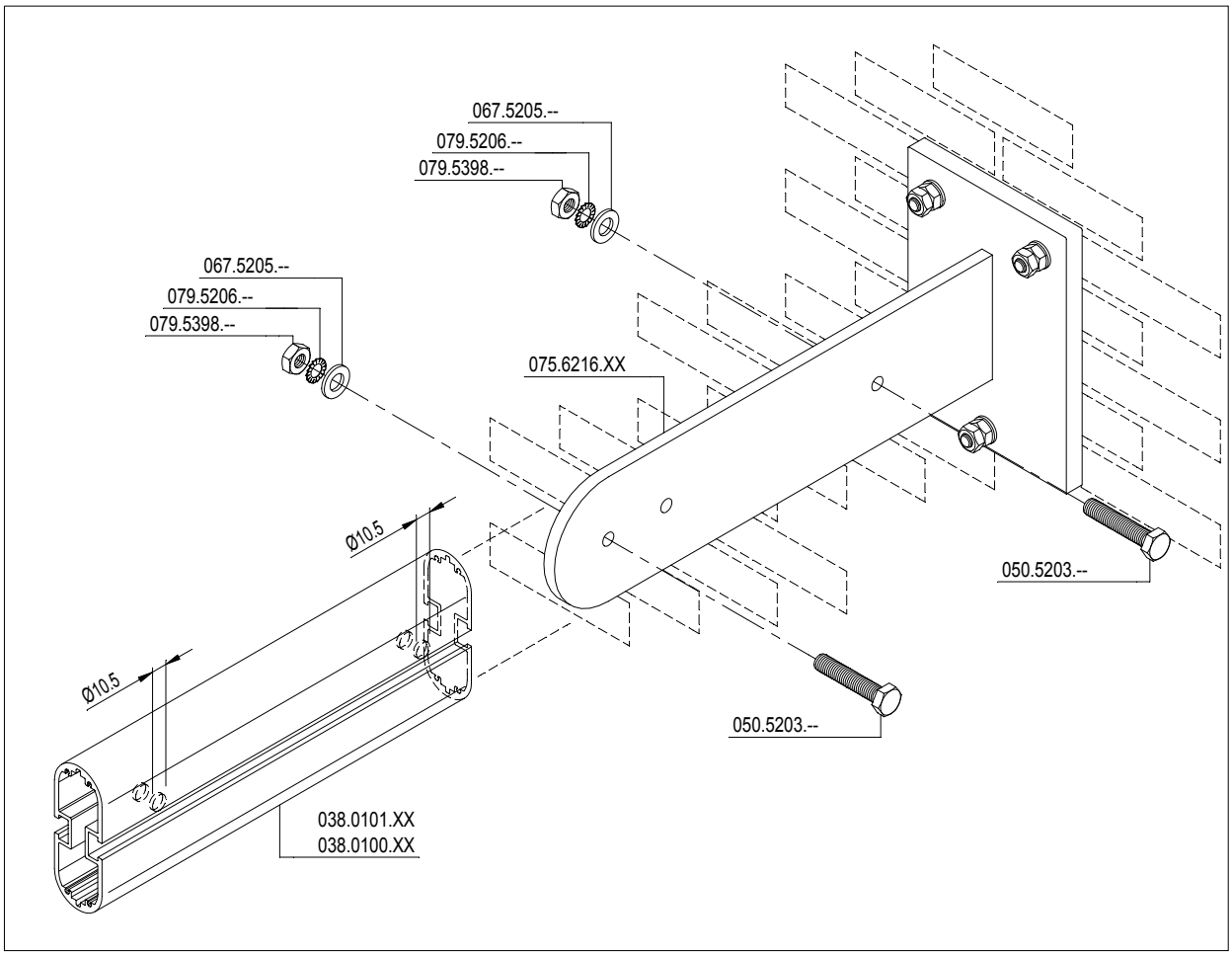

F

D0061258

MONTAGE MUURANKER
ASSEMBLAGE ANCRE
ASSEMBLY WALL BRACKET
MONTAGE MAUERANKER

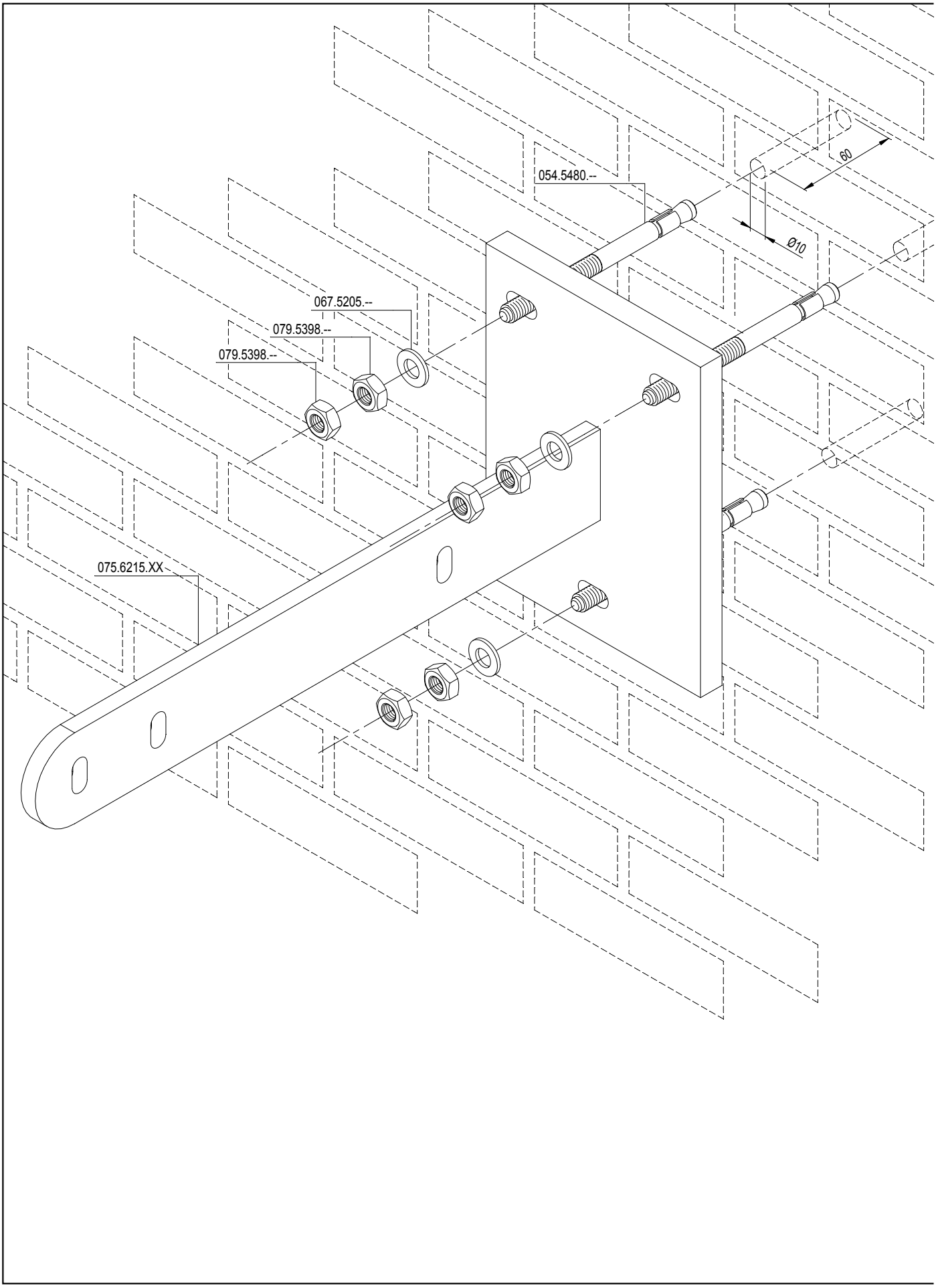

MONTAGE MUURANKER
ASSEMBLAGE ANCRE
ASSEMBLY WALL BRACKET
MONTAGE MAUERANKER

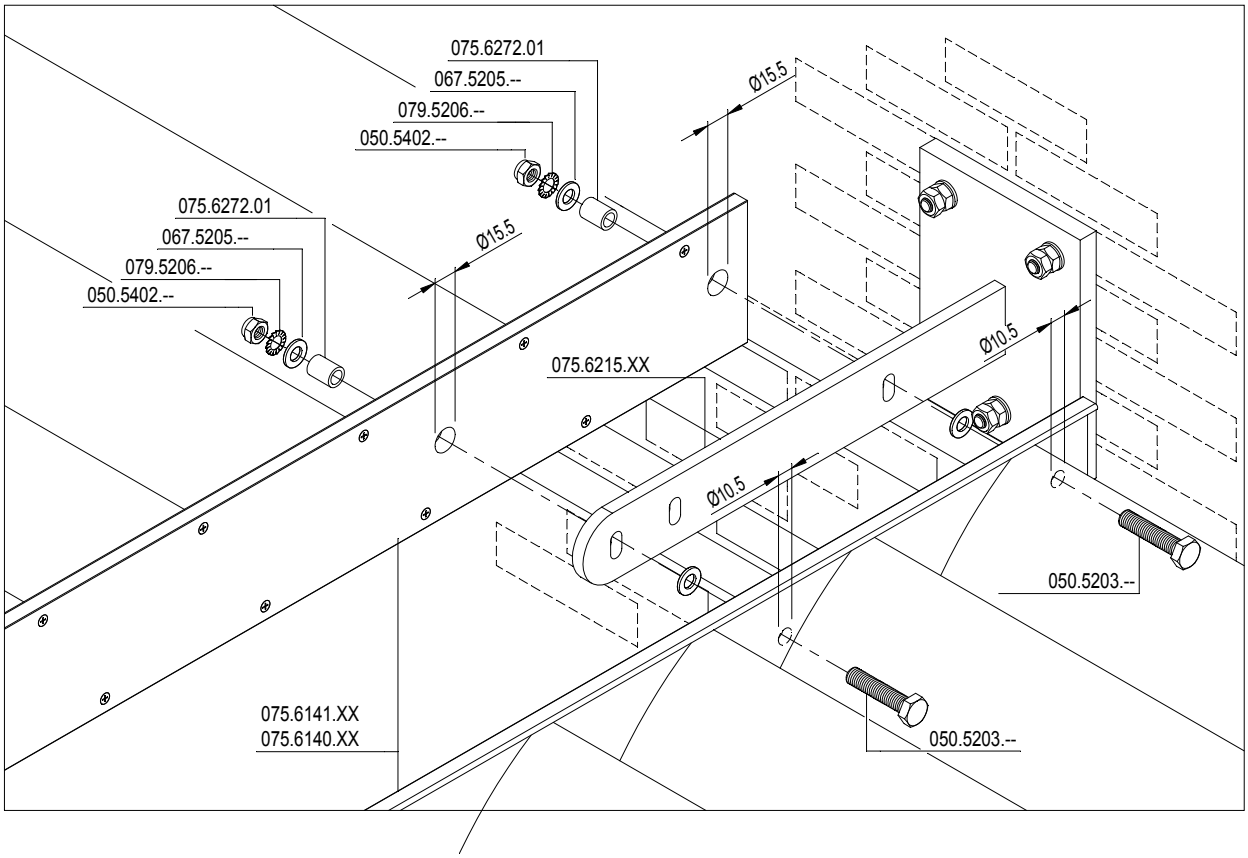

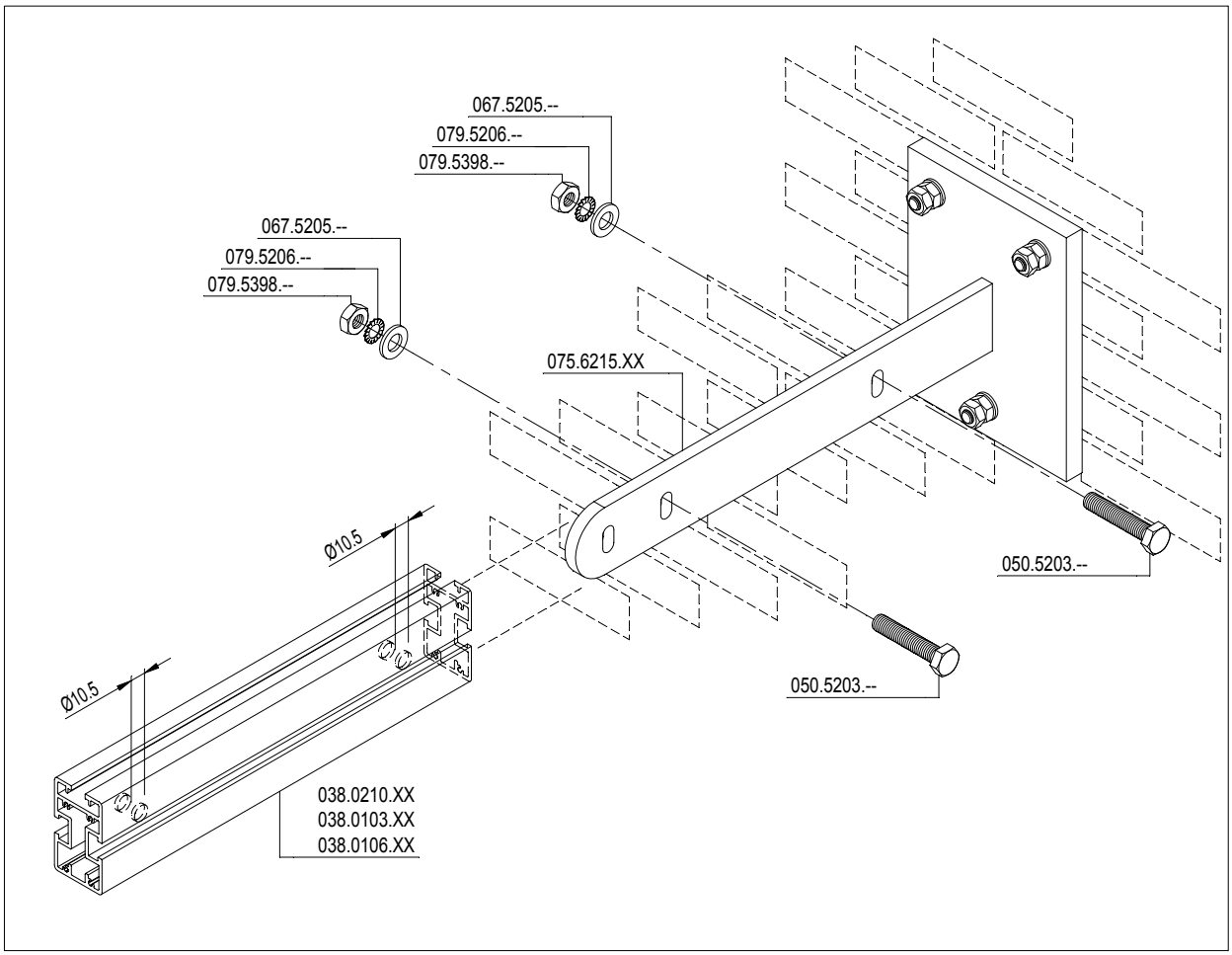

F

D0061259

MONTAGE MUURANKER
ASSEMBLAGE ANCRE
ASSEMBLY WALL BRACKET
MONTAGE MAUERANKER

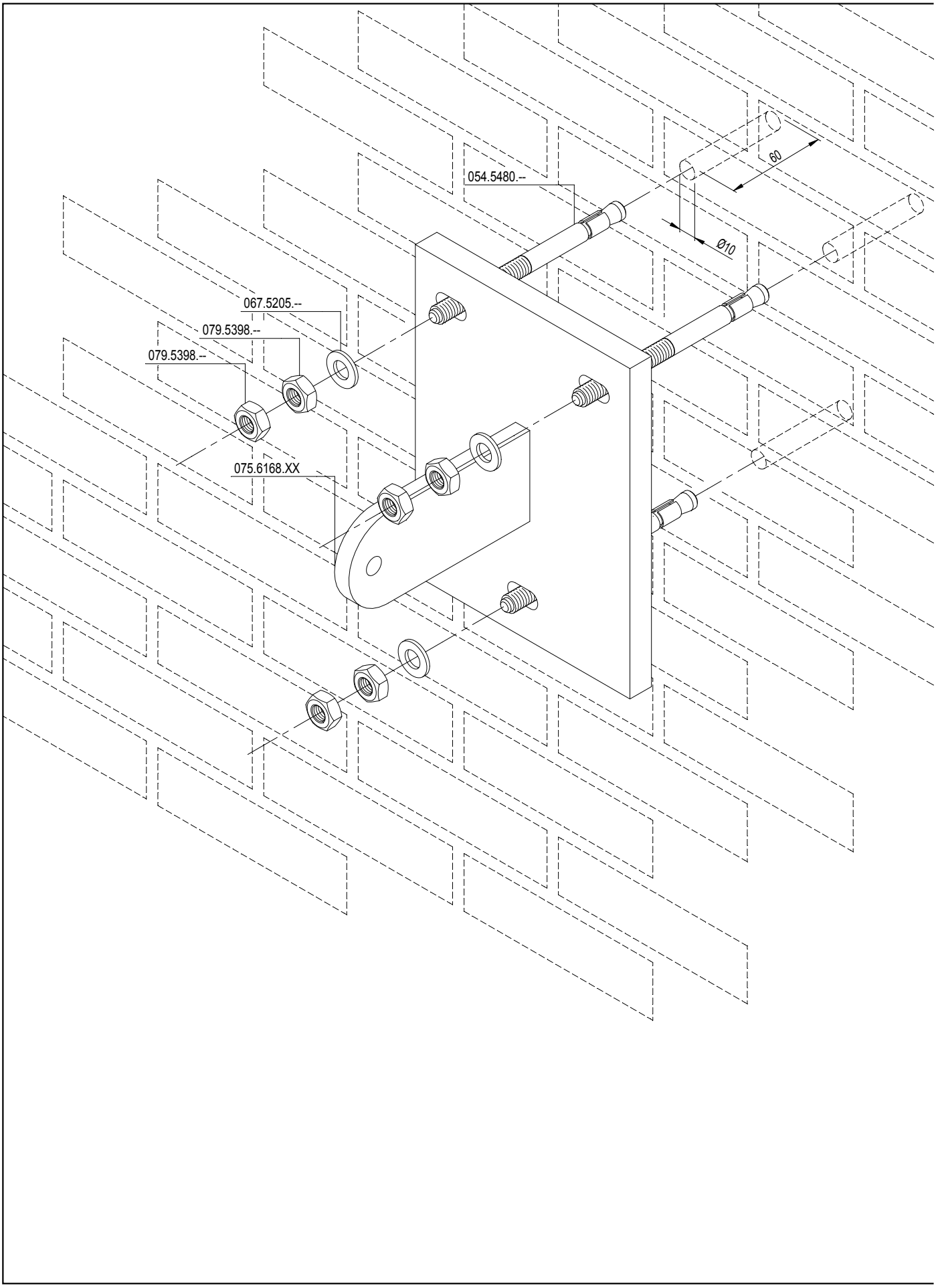

MONTAGE MUURANKER
ASSEMBLAGE ANCRE
ASSEMBLY WALL BRACKET
MONTAGE MAUERANKER

VARIANTE
VARIANT

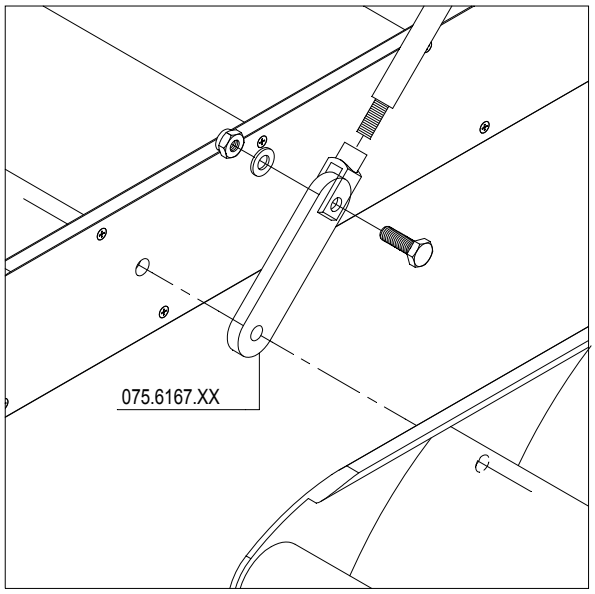

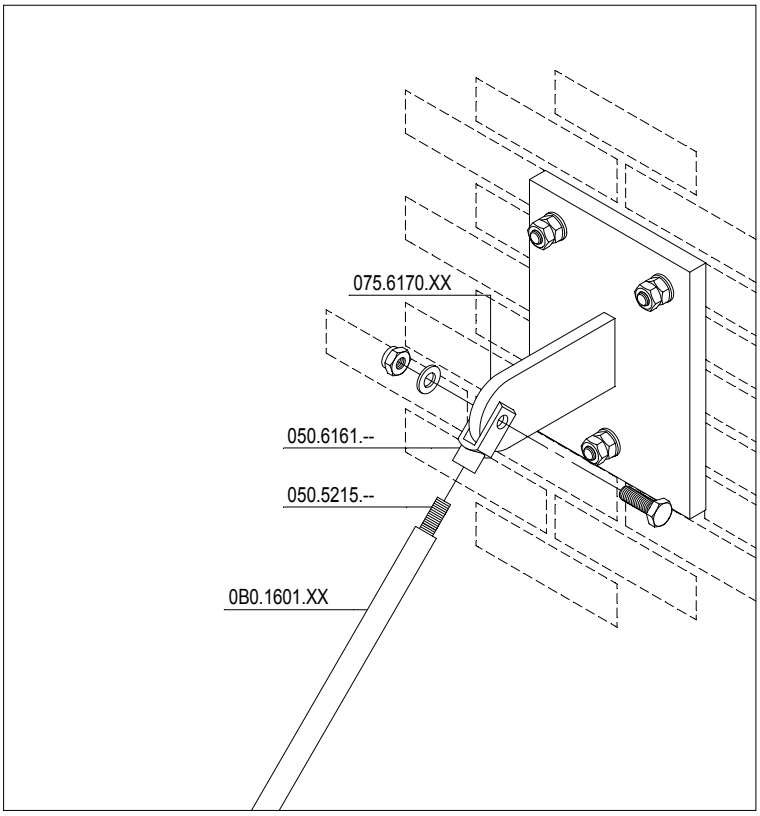

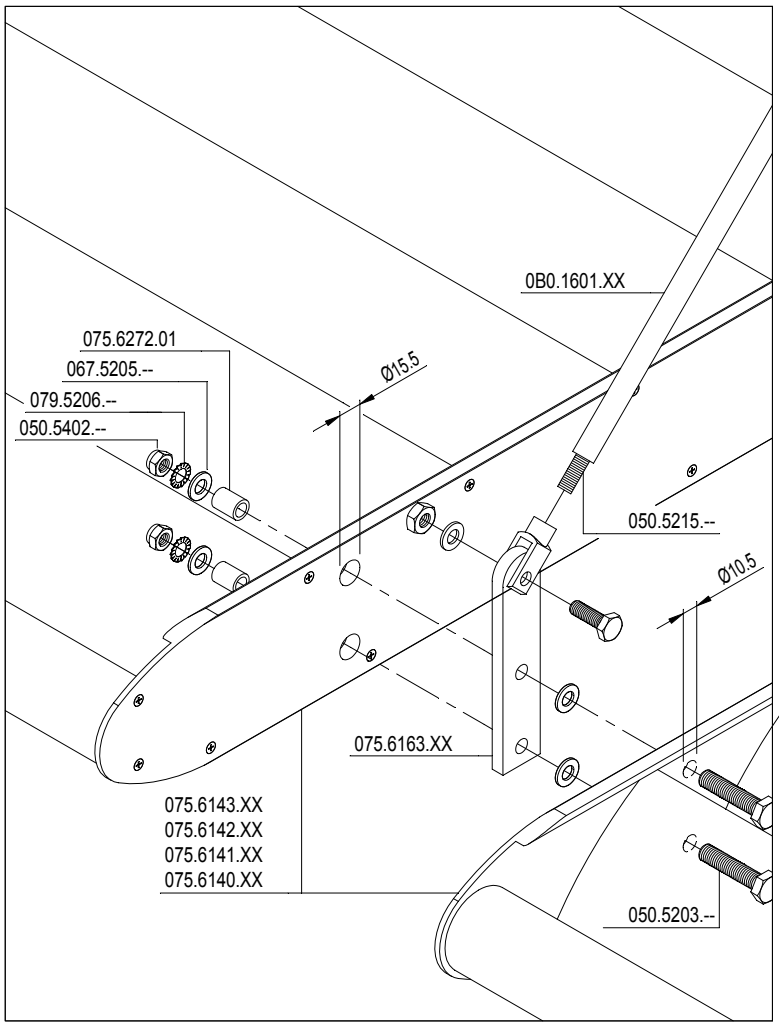

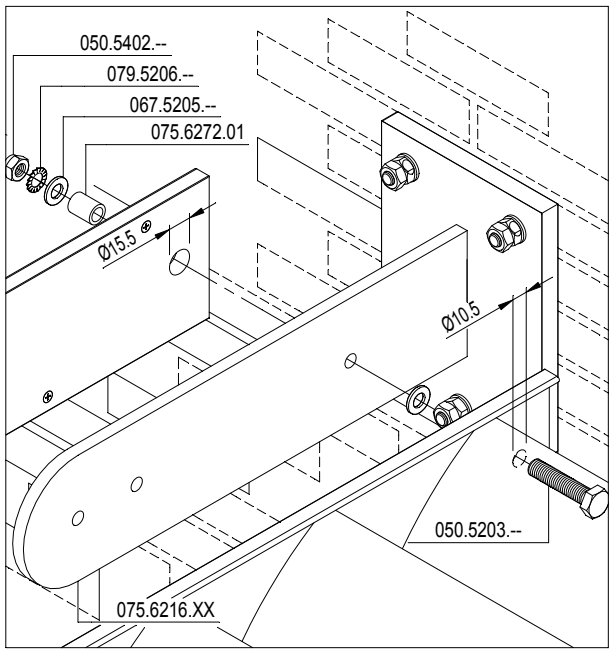

F

D0061261

BEVESTIGING DRAAGARM
FIXATION BRAS-SUPPORT
FIXATION SUPPORT ARM
BEFESTIGUNG TRAGARM

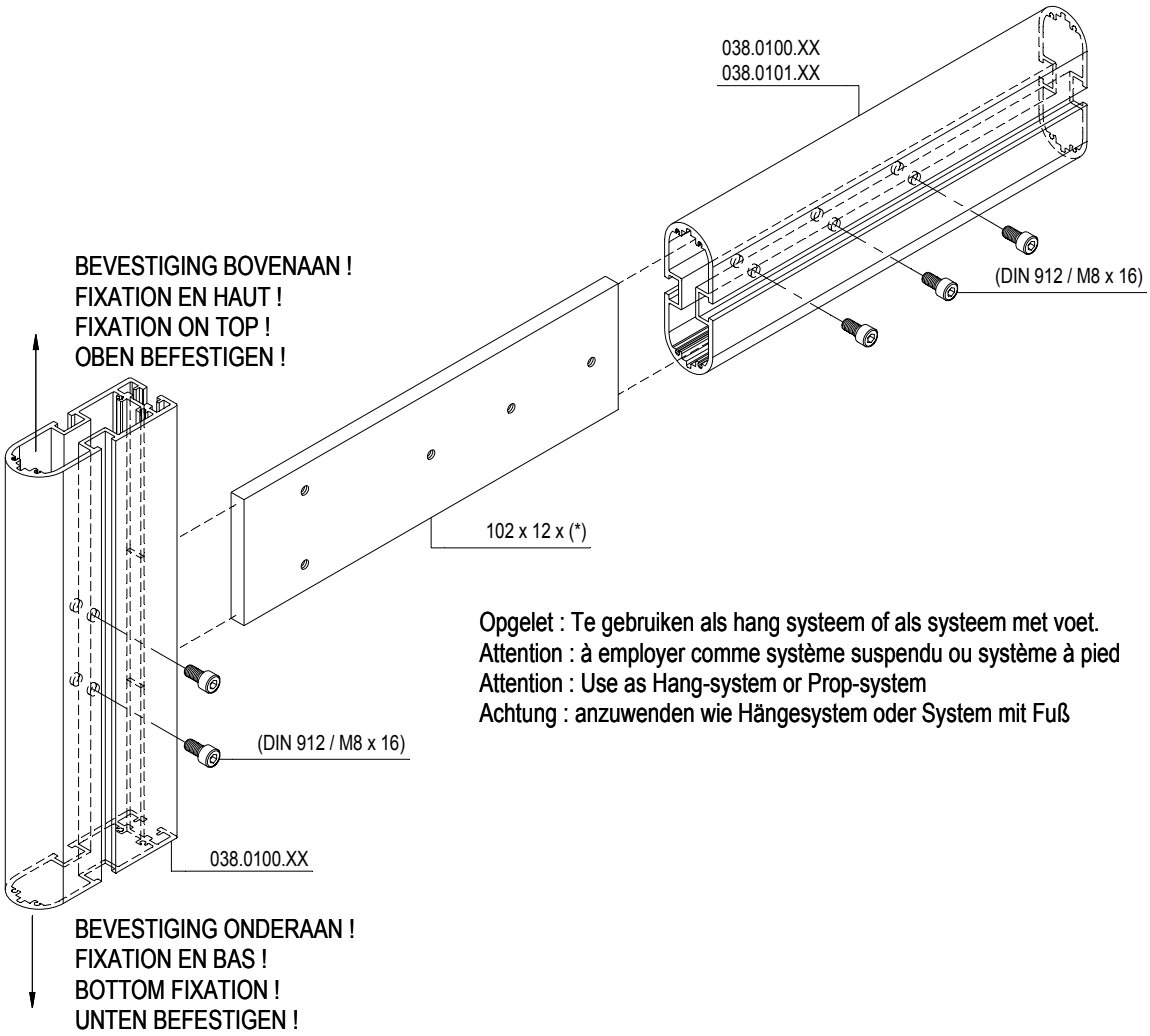

Opgelet : Te gebruiken als hang systeem of als systeem met voet.
Attention : à employer comme système suspendu ou système à pied
Attention : Use as Hang-system or Prop-system
Achtung : anzuwenden wie Hängesystem oder System mit Fuß

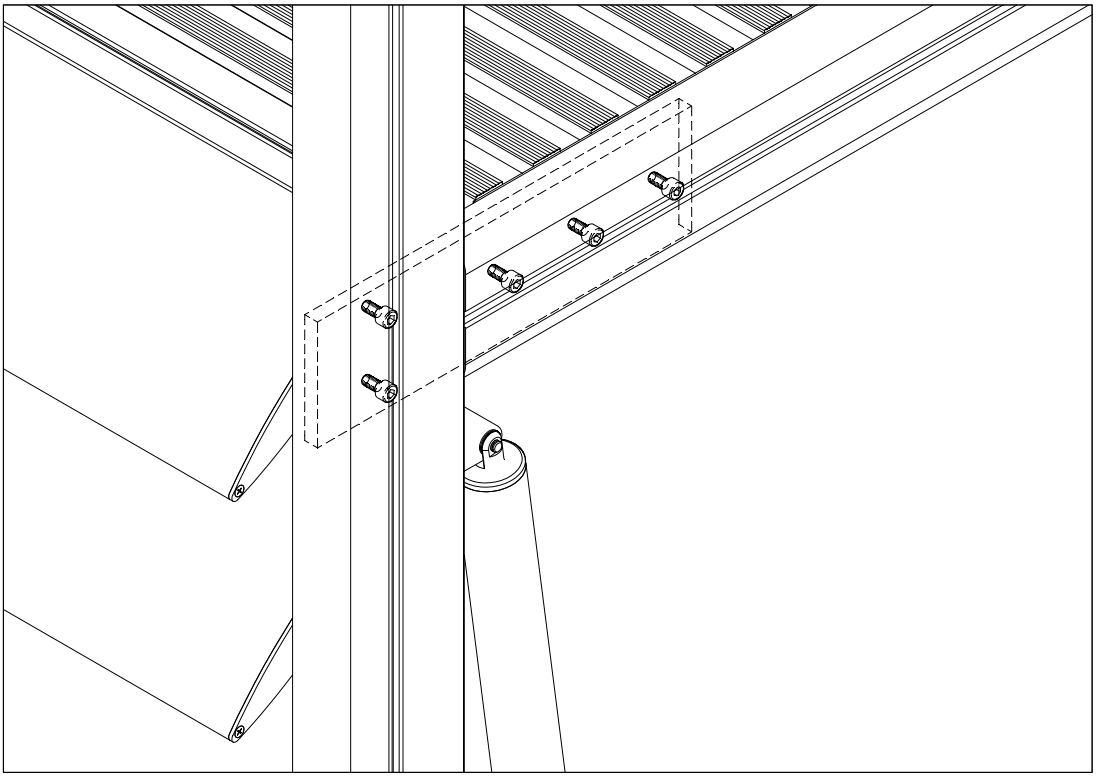

D0061262

F

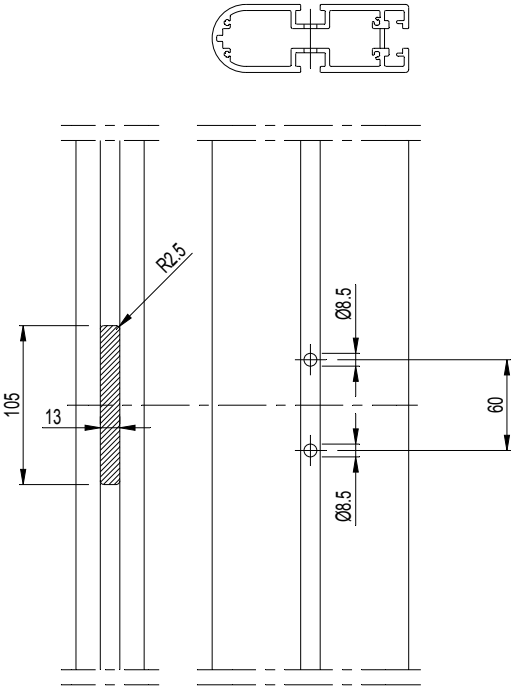

DRAAGARM VERTICAAL 038.0100.XX
BRAS-SUPPORT VERTICAL 038.0100.XX
SUPPORT ARM VERTICAL 038.0100.XX
TRAGARM SENKRECHT 038.0100.XX

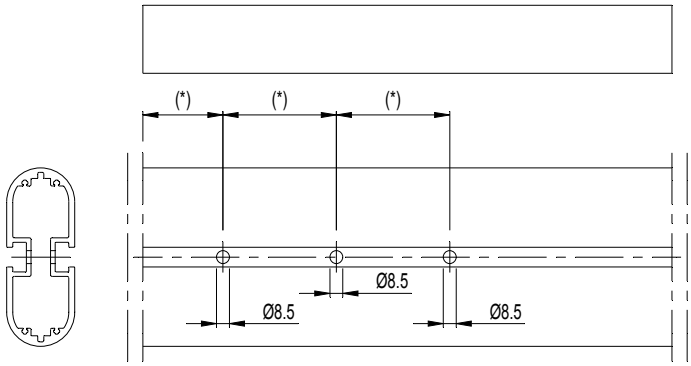

DRAAGARM HORIZONTAAL 038.0101.XX OF 038.0100.XX
BRAS-SUPPORT HORIZONTAL 038.0101.XX OU 038.0100.XX
SUPPORT ARM HORIZONTAL 038.0101.XX OR 038.0100.XX
TRAGARM WAAGERECHT 038.0101.XX ODER 038.0100.XX

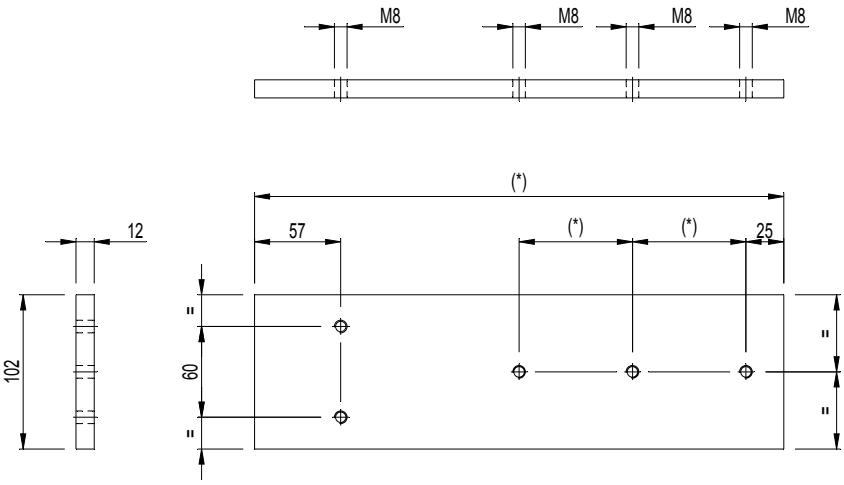

KOPPELPLAAT 102 mm x 12 mm x (mm*)
PLAQUE DE RACCORDEMENT 102 mm x 12 mm x (mm*)
CONNECTION PLATE 102 mm x 12 mm x (mm*)
KOPPLUNGSPLATTE 102 mm x 12 mm x (mm*)

(*) = LENGTE AFHANKELIJK VAN DE AFMETINGEN VAN DE CONSTRUCTIE
(*) = LONGUEUR DEPENDANT DES DIMENSIONS DE LA CONSTRUCTION
(*) = LENGTH DEPENDING ON DIMENSIONS OF CONSTRUCTION
(*) = LAENGE ABHAENGIG VON DEN ABMESSUNGEN DER KONSTRUKTION

DILATATIE
DILATATION
EXPANSION
AUSDEHNUNG

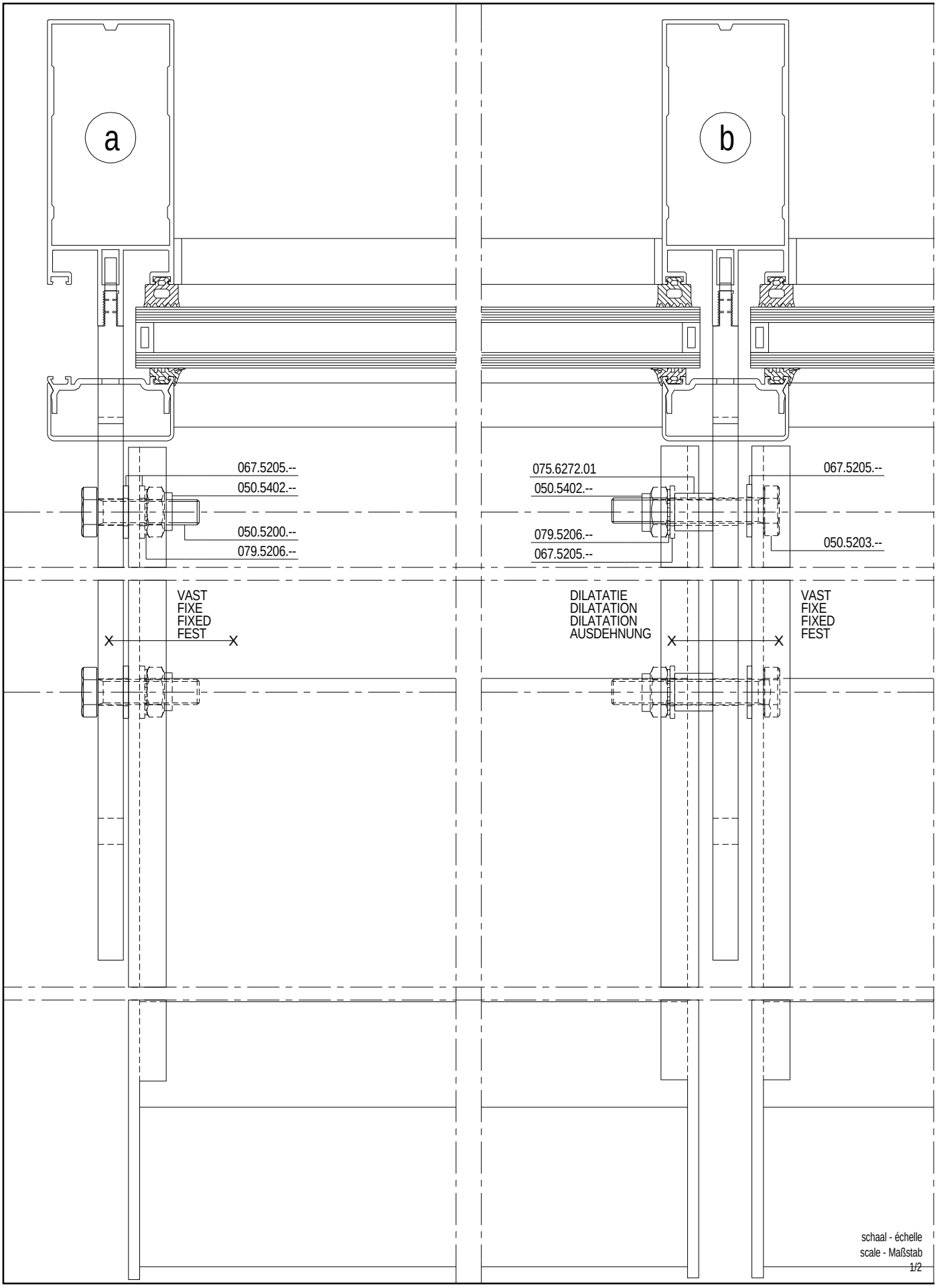

F

DILATATIE
DILATATION
EXPANSION
AUSDEHNUNG

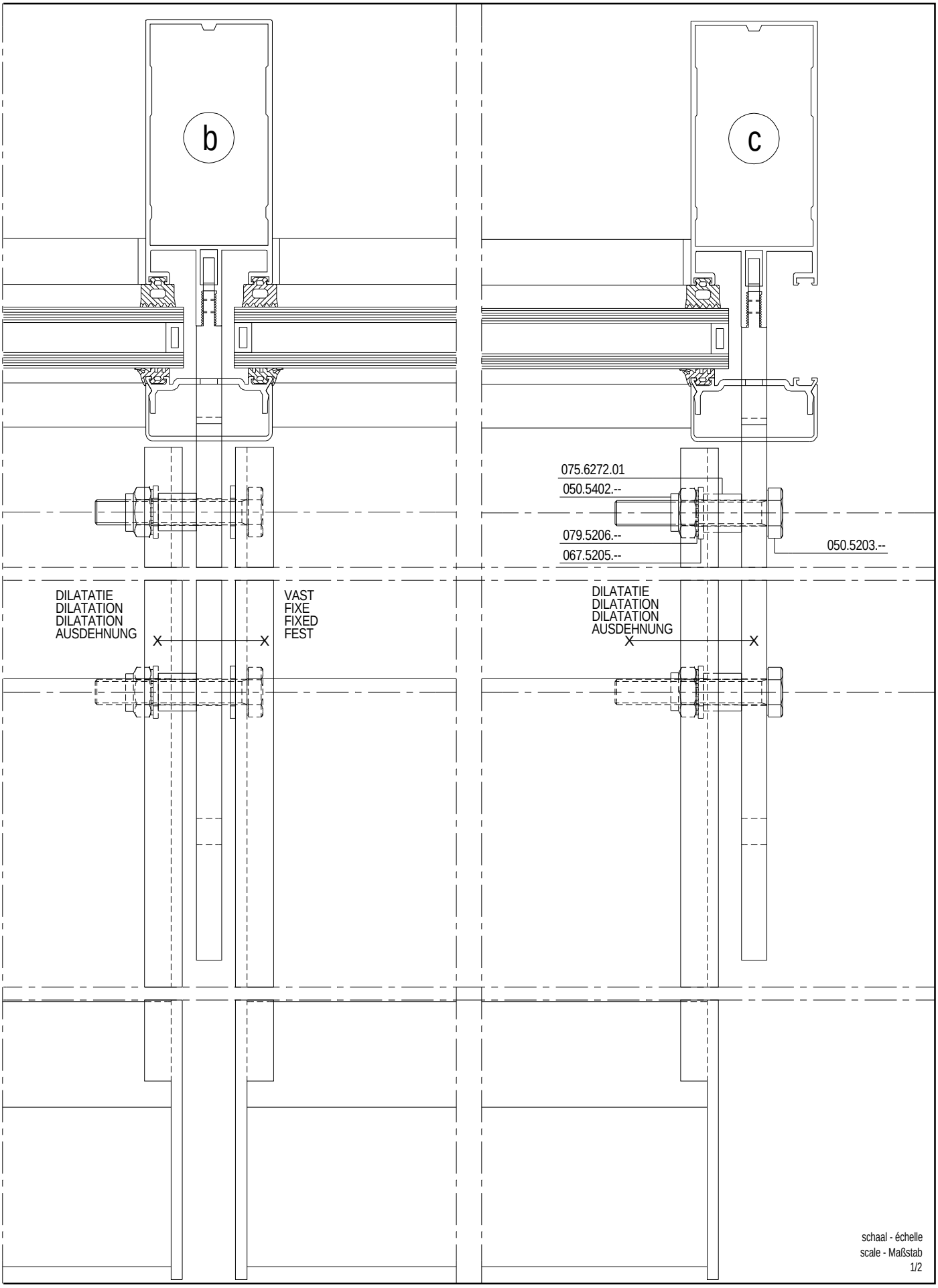

F

MONTAGE GLASS LOUVRES
MONTAGE GLASS LOUVRES
ASSEMBLY GLASS LOUVRES
MONTAGE GLASS LOUVRES

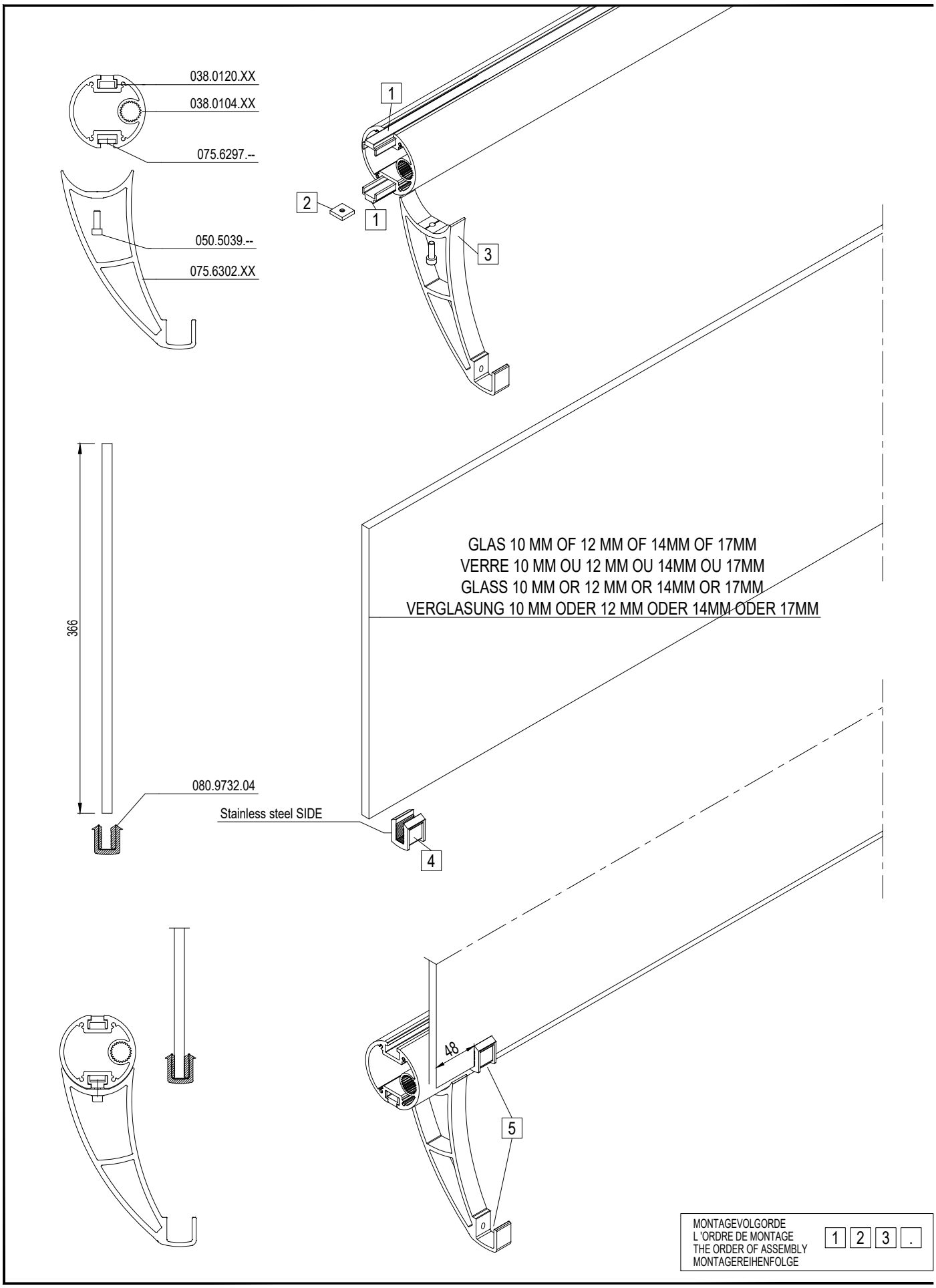

F

MONTAGE GLASS LOUVRES
MONTAGE GLASS LOUVRES
ASSEMBLY GLASS LOUVRES
MONTAGE GLASS LOUVRES

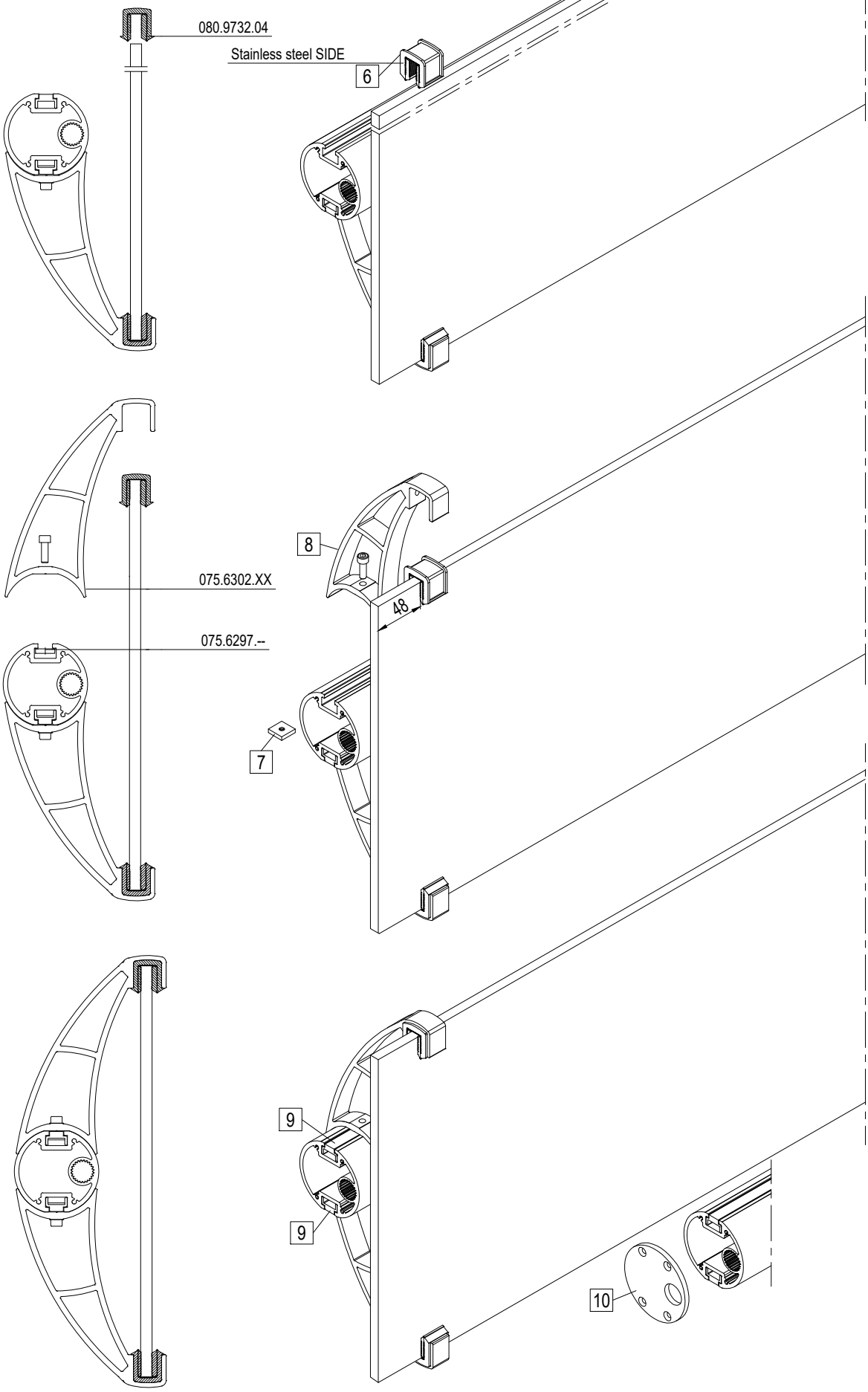

D0067779

F

F

G

REYNAERS aluminium

Toebehoren
Accessoires
Accessories
Zubehör

Art. N°		
050.5000.--	56.G.030	D0062164
050.5039.--	56.G.029	D0067194
050.5080.--	56.G.029	D0067194
050.5119.--	56.G.029	D0067194
050.5200.--	56.G.030	D0062164
050.5203.--	56.G.030	D0062164
050.5215.--	56.G.026	D0062161
050.5216.--	56.G.026	D0062161
050.5220.--	56.G.026	D0062161
050.5393.--	56.G.030	D0062164
050.5394.--	56.G.034	D0062132
050.5402.--	56.G.033	D0062130
051.5283.--	56.G.029	D0067194
052.5311.--	56.G.031	D0062166
052.5313.--	56.G.031	D0062166
053.5199.--	56.G.033	D0062130
054.5464.--	56.G.033	D0062130
054.5465.--	56.G.034	D0062132
054.5480.--	56.G.031	D0062166
058.5943.--	56.G.031	D0062166
060.6913.01	56.G.028	D0062163
067.5202.--	56.G.031	D0062166
067.5205.--	56.G.032	D0062167
067.5206.--	56.G.032	D0062167
075.5920.XX	56.G.004_01.001	D0082087
075.5921.XX	56.G.004_01.001	D0082087
075.5922.XX	56.G.004_01.001	D0082087
075.5923.XX	56.G.004_01.002	D0082090
075.5924.XX	56.G.004_01.002	D0082090
075.5925.XX	56.G.004_01.002	D0082090
075.5926.XX	56.G.004_01.002	D0082090
075.5970.XX	56.G.004_01.003	D0082092
075.5971.XX	56.G.004_01.003	D0082092
075.5972.XX	56.G.004_01.003	D0082092
075.5973.XX	56.G.004_01.004	D0082095
075.5974.XX	56.G.004_01.004	D0082095
075.5975.XX	56.G.004_01.004	D0082095
075.6020.XX	56.G.005	D0061243
075.6021.XX	56.G.005	D0061243
075.6022.XX	56.G.005	D0061243
075.6023.XX	56.G.006	D0061251
075.6024.XX	56.G.006	D0061251
075.6025.XX	56.G.006	D0061251
075.6026.XX	56.G.006	D0061251
075.6027.XX	56.G.018	D0067198
075.6033.XX	56.G.009	D0061264
075.6034.XX	56.G.009	D0061264
075.6035.XX	56.G.009	D0061264
075.6070.XX	56.G.007	D0061260
075.6071.XX	56.G.007	D0061260
075.6072.XX	56.G.007	D0061260
075.6073.XX	56.G.008	D0061263
075.6074.XX	56.G.008	D0061263
075.6075.XX	56.G.008	D0061263
075.6076.XX	56.G.008	D0061263
075.6077.XX	56.G.018	D0067198
075.6088.--	56.G.011	D0061352
075.6100.XX	56.G.010	D0061350
075.6101.XX	56.G.010	D0061350
075.6106.XX	56.G.010	D0061350
075.6140.XX	56.G.022	D0061266
075.6141.XX	56.G.022	D0061266
075.6142.XX	56.G.022	D0061266
075.6143.XX	56.G.022	D0061266
075.6160.XX	56.G.012	D0062155
075.6161.--	56.G.012	D0062155
075.6163.XX	56.G.012	D0062155
075.6167.XX	56.G.012	D0062155
075.6170.XX	56.G.017	D0062156
075.6171.XX	56.G.017	D0062156

Art. N°		
075.6200.XX	56.G.014	D0061354
075.6201.XX	56.G.014	D0061354
075.6202.XX	56.G.015	D0061355
075.6203.XX	56.G.015	D0061355
075.6211.XX	56.G.014	D0061354
075.6213.XX	56.G.015	D0061355
075.6215.XX	56.G.016	D0061356
075.6216.XX	56.G.016	D0061356
075.6217.XX	56.G.016	D0061356
075.6218.XX	56.G.016	D0061356
075.6230.XX	56.G.023	D0061271
075.6231.XX	56.G.023	D0061271
075.6232.XX	56.G.023	D0061271
075.6233.XX	56.G.023	D0061271
075.6245.--	56.G.025	D0061272
075.6258.--	56.G.011	D0061352
075.6260.--	56.G.033	D0062130
075.6261.--	56.G.033	D0062130
075.6270.07	56.G.034	D0062132
075.6271.07	56.G.034	D0062132
075.6272.01	56.G.034	D0062132
075.6297.--	56.G.018	D0067198
075.6302.XX	56.G.018	D0067198
075.6330.XX	56.G.024	D0067196
075.6331.XX	56.G.024	D0067196
075.6332.XX	56.G.024	D0067196
075.6333.XX	56.G.024	D0067196
075.6499.--	56.G.035	D0062168
075.6500.--	56.G.035	D0062168
075.6501.--	56.G.027	D0062162
075.6502.--	56.G.027	D0062162
075.6503.--	56.G.027	D0062162
075.6504.XX	56.G.011	D0061352
075.6506.--	56.G.013	D0061353
075.7000.XX	56.G.020	D0062158
075.7001.XX	56.G.021	D0062160
079.5206.--	56.G.032	D0062167
079.5398.--	56.G.032	D0062167
080.9732.04	56.G.019	D0067203

TOEBEHOREN
ACCESSOIRES
ACCESSORIES
ZUBEHOER

050.5039.-- (56.G.029)

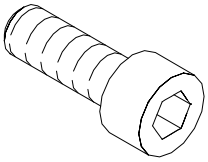

050.5080.-- (56.G.029)

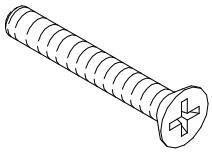

050.5119.-- (56.G.030)

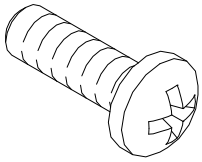

050.5200.-- (56.G.030)

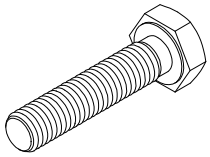

050.5203.-- (56.G.030)

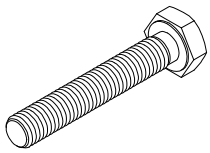

050.5215.-- (56.G.026)

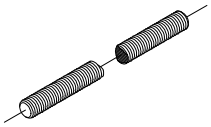

050.5216.-- (56.G.026)

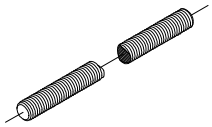

050.5220.-- (56.G.026)

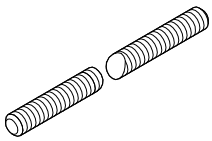

050.5393.-- (56.G.030)

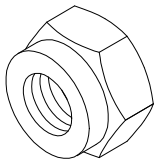

050.5394.-- (56.G.034)

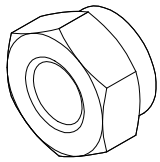

050.5402.-- (56.G.033)

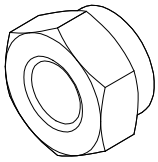

051.5271.-- (56.G.029)

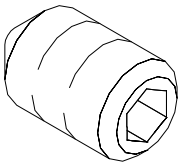

052.5311.-- (56.G.031)

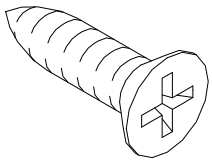

052.5313.-- (56.G.031)

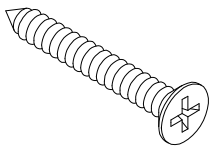

053.5199.-- (56.G.033)

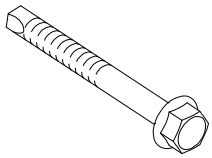

054.5464.-- (56.G.033)

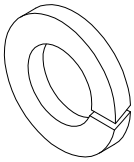

054.5465.-- (56.G.034)

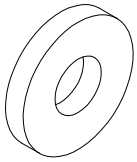

054.5480.-- (56.G.031)

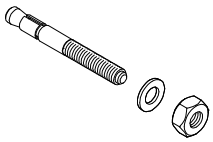

058.5943.-- (56.G.031)

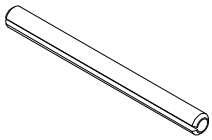

060.6913.01 (56.G.028)

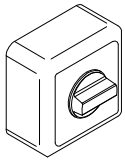

067.5202.-- (56.G.031)

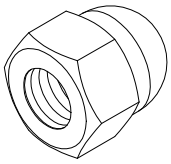

067.5205.-- (56.G.032)

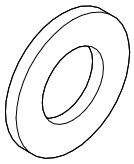

067.5206.-- (56.G.032)

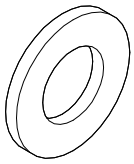

075.6020.XX (56.G.005)

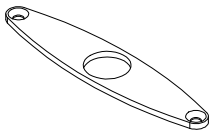

075.6021.XX (56.G.005)

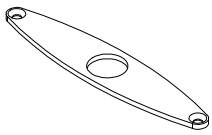

075.6022.XX (56.G.005)

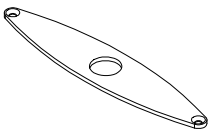

075.6023.XX (56.G.006)

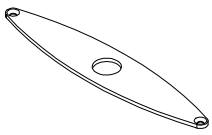

075.6024.XX (56.G.006)

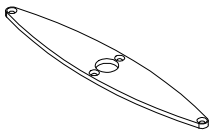

075.6025.XX (56.G.006)

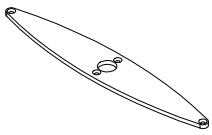

075.6026.XX (56.G.006)

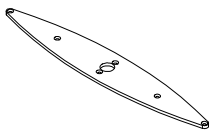

075.6027.XX (56.G.018)

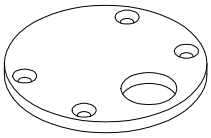

075.6033.XX (56.G.009)

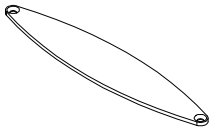

075.6034.XX (56.G.009)

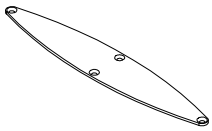

075.6035.XX (56.G.009)

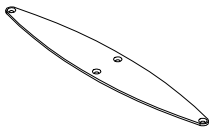

075.6070.XX (56.G.007)

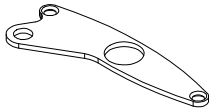

D0062643

G

075.6071.XX (56.G.007)

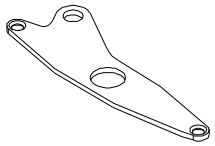

075.6072.XX (56.G.007)

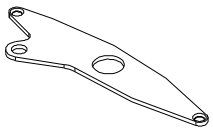

075.6073.XX (56.G.008)

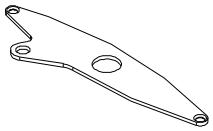

075.6074.XX (56.G.008)

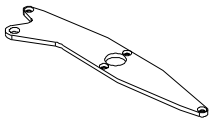

075.6075.XX (56.G.008)

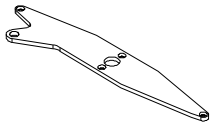

075.6076.XX (56.G.008)

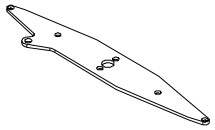

075.6077.XX (56.G.018)

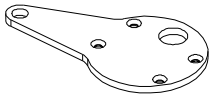

075.6088.-- (56.G.011)

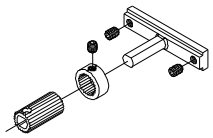

075.6100.XX (56.G.010)

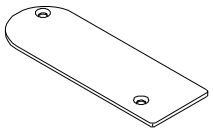

075.6101.XX (56.G.010)

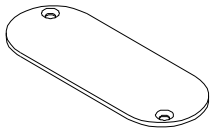

075.6106.XX (56.G.010)

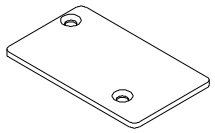

075.6140.XX (56.G.022)

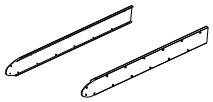

075.6141.XX (56.G.022)

075.6142.XX (56.G.022)

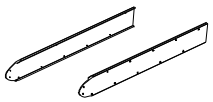

075.6143.XX (56.G.022)

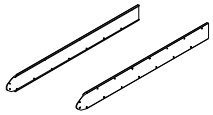

075.6160.XX (56.G.012)

075.6161.-- (56.G.012)

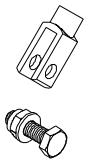

075.6163.XX (56.G.012)

075.6167.XX (56.G.012)

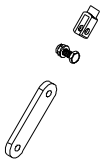

075.6170.XX (56.G.017)

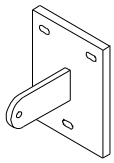

075.6171.XX (56.G.017)

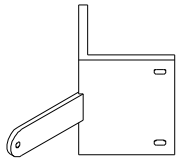

075.6200.XX (56.G.014)

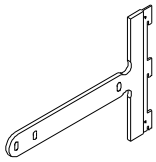

075.6201.XX (56.G.014)

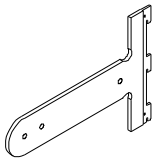

075.6202.XX (56.G.015)

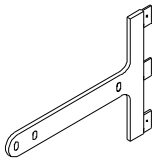

075.6203.XX (56.G.015)

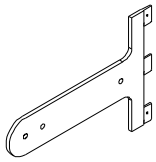

075.6211.XX (56.G.014)

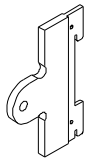

075.6213.XX (56.G.015)

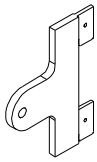

075.6215.XX (56.G.016)

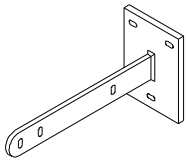

075.6216.XX (56.G.016)

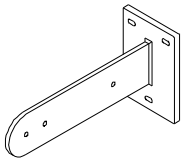

075.6217.XX (56.G.016)

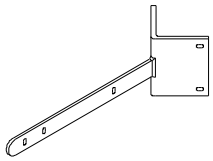

075.6218.XX (56.G.016)

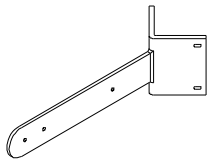

075.6230.XX (56.G.023)

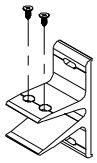

075.6231.XX (56.G.023)

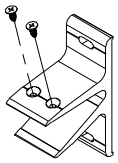

075.6232.XX (56.G.023)

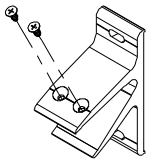

075.6233.XX (56.G.023)

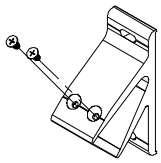

D0062644

075.6245.-- (56.G.025)

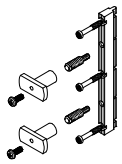

075.6258.-- (56.G.011)

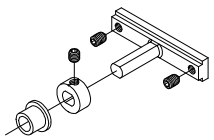

075.6260.-- (56.G.033)

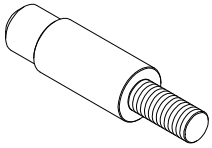

075.6261.-- (56.G.033)

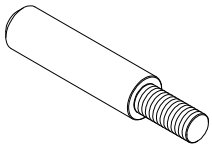

075.6270.07 (56.G.034)

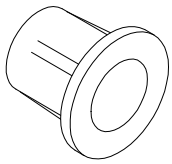

075.6271.07 (56.G.034)

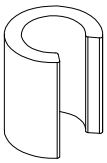

075.6272.01 (56.G.034)

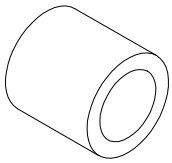

075.6297.-- (56.G.018)

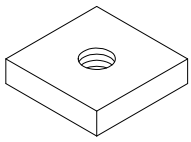

075.6302.XX (56.G.018)

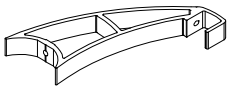

075.6330.XX (56.G.024)

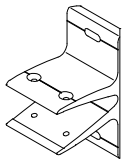

075.6331.XX (56.G.024)

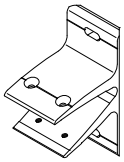

075.6332.XX (56.G.024)

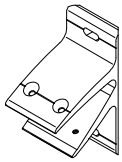

075.6333.XX (56.G.024)

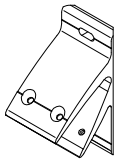

075.6499.-- (56.G.035)

075.6500.-- (56.G.035)

075.6501.-- (56.G.027)

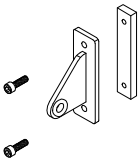

075.6502.-- (56.G.027)

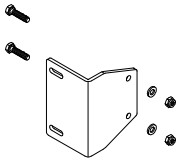

075.6503.-- (56.G.027)

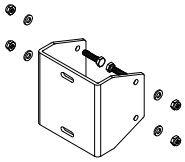

075.6504.XX (56.G.011)

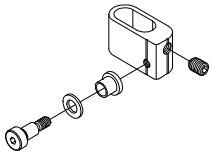

075.6506.-- (56.G.013)

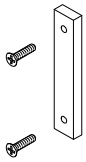

075.7000.XX (56.G.020)

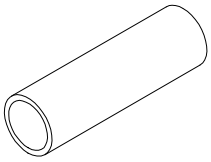

075.7001.XX (56.G.021)

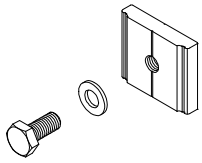

079.5206.-- (56.G.032)

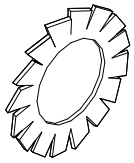

079.5398.-- (56.G.032)

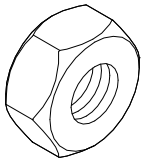

080.9732.04 (56.G.019)

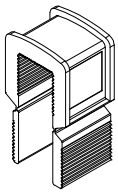

D0062645

EINDSTUK LAMEL
PIECE FINALE LAME
END PIECE LOUVRE
ENDSTUECK LAMELLE

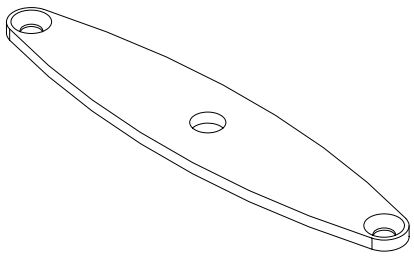 H=3 B=121 D=26	075.5920.XX EINDSTUK LAMEL 120MM PIECE FINALE LAME 120MM END PIECE LOUVRE 120MM ENDSTUECK LAMELLE 120MM	BS 100		2 st./pc 052.5311.-- DIN 7982 4.2 x 16
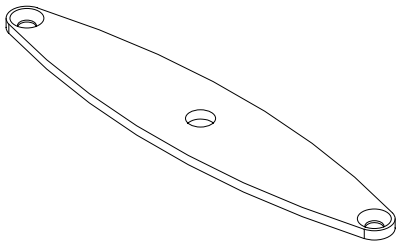 H=3 B=141 D=29	075.5921.XX EINDSTUK LAMEL 140MM PIECE FINALE LAME 140MM END PIECE LOUVRE 140MM ENDSTUECK LAMELLE 140MM	BS 100		2 st./pc 052.5311.-- DIN 7982 4.2 x 16
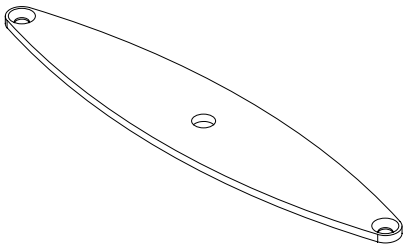 H=3 B=181 D=37	075.5922.XX EINDSTUK LAMEL 180MM PIECE FINALE LAME 180MM END PIECE LOUVRE 180MM ENDSTUECK LAMELLE 180MM	BS 100		2 st./pc 052.5311.-- DIN 7982 4.2 x 16

D0082087

EINDSTUK LAMEL
PIECE FINALE LAME
END PIECE LOUVRE
ENDSTUECK LAMELLE

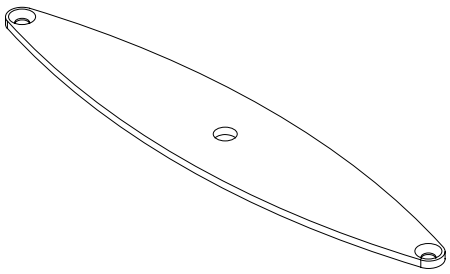 H=3 B=201 D=40	075.5923.XX EINDSTUK LAMEL 200MM PIECE FINALE LAME 200MM END PIECE LOUVRE 200MM ENDSTUECK LAMELLE 200MM	BS 100		2 st./pc 052.5311.-- DIN 7982 4.2 x 16
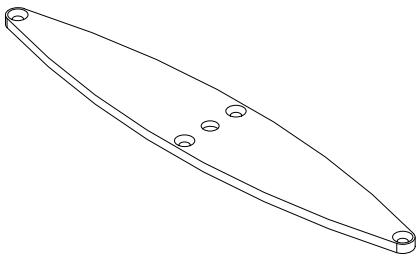 H=5 B=251 D=44.5	075.5924.XX EINDSTUK LAMEL 250MM PIECE FINALE LAME 250MM END PIECE LOUVRE 250MM ENDSTUECK LAMELLE 250MM	BS 100		4 st./pc 052.5311.-- DIN 7982 4.2 x 16
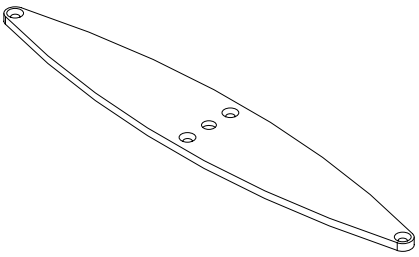 H=5 B=302 D=50.5	075.5925.XX EINDSTUK LAMEL 300MM PIECE FINALE LAME 300MM END PIECE LOUVRE 300MM ENDSTUECK LAMELLE 300MM	BS 100		4 st./pc 052.5311.-- DIN 7982 4.2 x 16
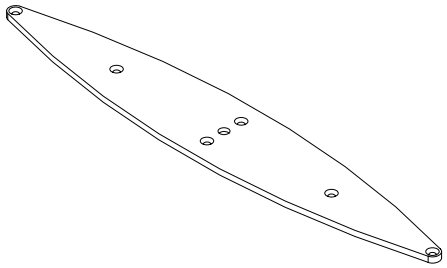 H=5 B=402 D=66	075.5926.XX EINDSTUK LAMEL 400MM PIECE FINALE LAME 400MM END PIECE LOUVRE 400MM ENDSTUECK LAMELLE 400MM	BS 100		6 st./pc 052.5311.-- DIN 7982 4.2 x 16

D0082090

G

EINDSTUK LAMEL
PIECE FINALE LAME
END PIECE LOUVRE
ENDSTUECK LAMELLE

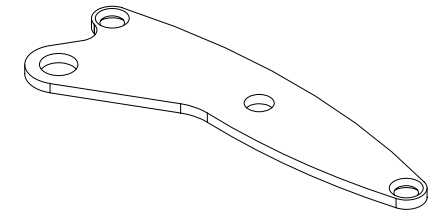 H=3 B=121 D=47	075.5970.XX EINDSTUK LAMEL 120MM PIECE FINALE LAME 120MM END PIECE LOUVRE 120MM ENDSTUECK LAMELLE 120MM	BS 100		2 st./pc 052.5311.-- DIN 7982 4.2 x 16
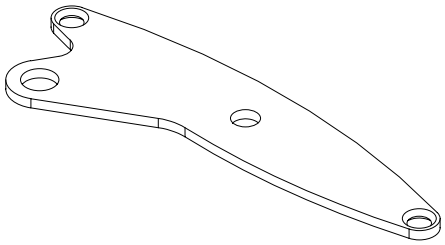 H=3 B=141 D=49.5	075.5971.XX EINDSTUK LAMEL 140MM PIECE FINALE LAME 140MM END PIECE LOUVRE 140MM ENDSTUECK LAMELLE 140MM	BS 100		2 st./pc 052.5311.-- DIN 7982 4.2 x 16
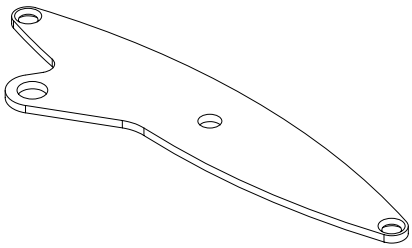 H=3 B=181 D=56.5	075.5972.XX EINDSTUK LAMEL 180MM PIECE FINALE LAME 180MM END PIECE LOUVRE 180MM ENDSTUECK LAMELLE 180MM	BS 100		2 st./pc 052.5311.-- DIN 7982 4.2 x 16

D0082092

EINDSTUK LAMEL
PIECE FINALE LAME
END PIECE LOUVRE
ENDSTUECK LAMELLE

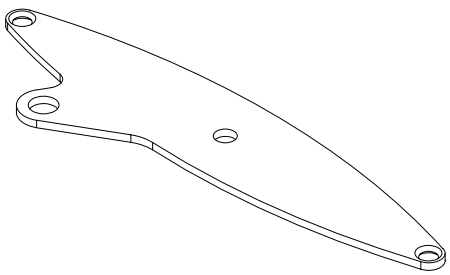 H=3 B=201 D=59	075.5973.XX EINDSTUK LAMEL 200MM PIECE FINALE LAME 200MM END PIECE LOUVRE 200MM ENDSTUECK LAMELLE 200MM	BS 100		2 st./pc 052.5311.-- DIN 7982 4.2 x 16
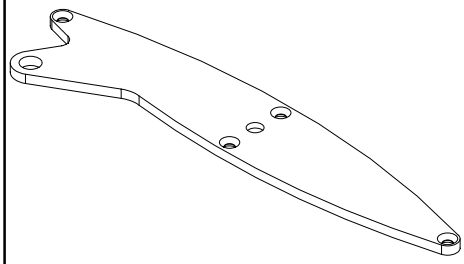 H=5 B=251 D=66.25	075.5974.XX EINDSTUK LAMEL 250MM PIECE FINALE LAME 250MM END PIECE LOUVRE 250MM ENDSTUECK LAMELLE 250MM	BS 100		4 st./pc 052.5311.-- DIN 7982 4.2 x 16
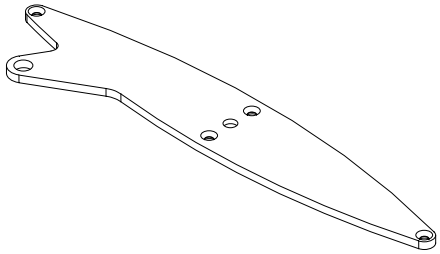 H=5 B=302 D=74.25	075.5975.XX EINDSTUK LAMEL 300MM PIECE FINALE LAME 300MM END PIECE LOUVRE 300MM ENDSTUECK LAMELLE 300MM	BS 100		4 st./pc 052.5311.-- DIN 7982 4.2 x 16
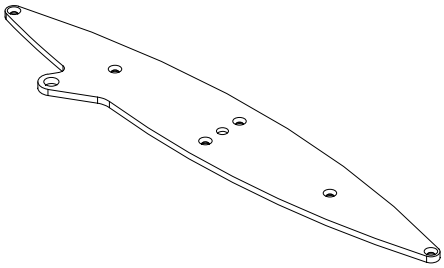 H=5 B=402 D=82	075.5976.XX EINDSTUK LAMEL 400MM PIECE FINALE LAME 400MM END PIECE LOUVRE 400MM ENDSTUECK LAMELLE 400MM	BS 100		6 st./pc 052.5311.-- DIN 7982 4.2 x 16

D0082095

EINDSTUK LAMEL
PIECE FINALE LAME
END PIECE LOUVRE
ENDSTUECK LAMELLE

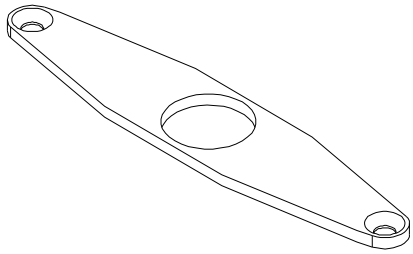 H=3 B=121 D=26	075.6020.XX EINDSTUK LAMEL 121MM PIECE FINALE LAME 121MM END PIECE LOUVRE 121MM ENDSTUECK LAMELLE 121MM	BS 100 038.1000.XX		2 st./pc 052.5311.-- DIN 7982 4.2 x 16
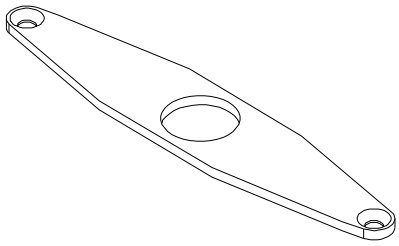 H=3 B=141 D=29	075.6021.XX EINDSTUK LAMEL 141MM PIECE FINALE LAME 141MM END PIECE LOUVRE 141MM ENDSTUECK LAMELLE 141MM	BS 100 038.1001.XX		2 st./pc 052.5311.-- DIN 7982 4.2 x 16
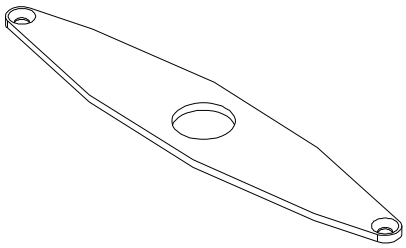 H=3 B=181 D=37	075.6022.XX EINDSTUK LAMEL 181MM PIECE FINALE LAME 181MM END PIECE LOUVRE 181MM ENDSTUECK LAMELLE 181MM	BS 100 038.1002.XX		2 st./pc 052.5311.-- DIN 7982 4.2 x 16

D0061243

EINDSTUK LAMEL
PIECE FINALE LAME
END PIECE LOUVRE
ENDSTUECK LAMELLE

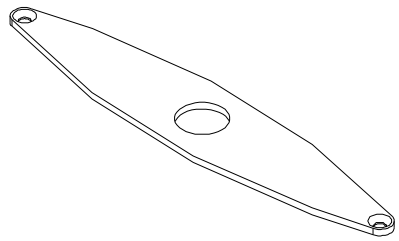 H=3 B=201 D=40	075.6023.XX EINDSTUK LAMEL 201MM PIECE FINALE LAME 201MM END PIECE LOUVRE 201MM ENDSTUECK LAMELLE 201MM	BS 100 038.1003.XX		2 st./pc 052.5311.-- DIN 7982 4.2 x 16
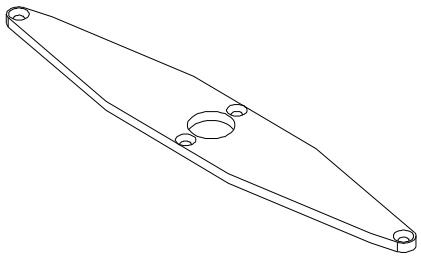 H=5 B=251 D=44.5	075.6024.XX EINDSTUK LAMEL 251MM PIECE FINALE LAME 251MM END PIECE LOUVRE 251MM ENDSTUECK LAMELLE 251MM	BS 100 038.1004.XX		4 st./pc 052.5311.-- DIN 7982 4.2 x 16
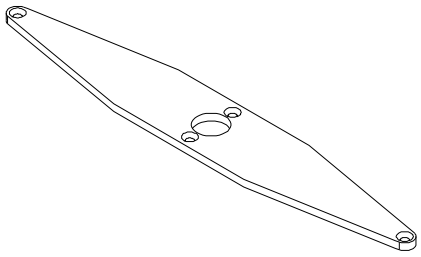 H=5 B=302 D=50.5	075.6025.XX EINDSTUK LAMEL 302MM PIECE FINALE LAME 302MM END PIECE LOUVRE 302MM ENDSTUECK LAMELLE 302MM	BS 100 038.1005.XX		4 st./pc 052.5311.-- DIN 7982 4.2 x 16
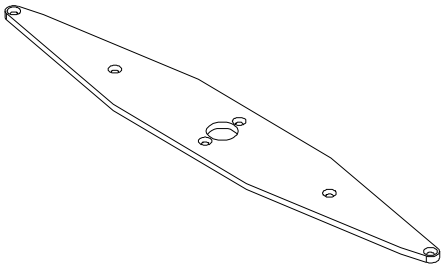 H=5 B=402 D=66	075.6026.XX EINDSTUK LAMEL 402MM PIECE FINALE LAME 402MM END PIECE LOUVRE 402MM ENDSTUECK LAMELLE 402MM	BS 100 038.1006.XX		6 st./pc 052.5311.-- DIN 7982 4.2 x 16

D0061251

G

EINDSTUK LAMEL
PIECE FINALE LAME
END PIECE LOUVRE
ENDSTUECK LAMELLE

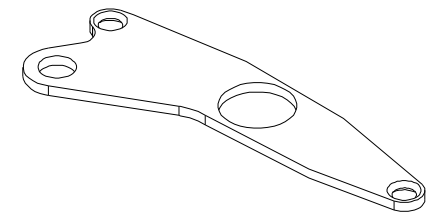 H=3 B=121 D=47	075.6070.XX EINDSTUK LAMEL 121MM PIECE FINALE LAME 121MM END PIECE LOUVRE 121MM ENDSTUECK LAMELLE 121MM	BS 100 038.1000.XX		2 st./pc 052.5311.-- DIN 7982 4.2 x 16
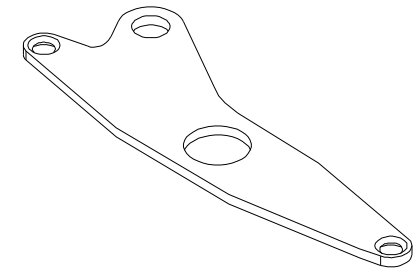 H=3 B=141 D=49.5	075.6071.XX EINDSTUK LAMEL 141MM PIECE FINALE LAME 141MM END PIECE LOUVRE 141MM ENDSTUECK LAMELLE 141MM	BS 100 038.1001.XX		2 st./pc 052.5311.-- DIN 7982 4.2 x 16
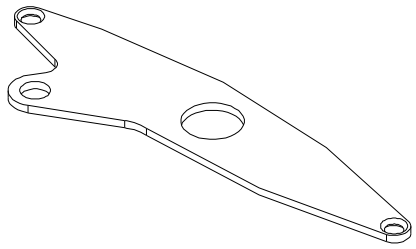 H=3 B=181 D=56.5	075.6072.XX EINDSTUK LAMEL 181MM PIECE FINALE LAME 181MM END PIECE LOUVRE 181MM ENDSTUECK LAMELLE 181MM	BS 100 038.1002.XX		2 st./pc 052.5311.-- DIN 7982 4.2 x 16

D0061260

EINDSTUK LAMEL
PIECE FINALE LAME
END PIECE LOUVRE
ENDSTUECK LAMELLE

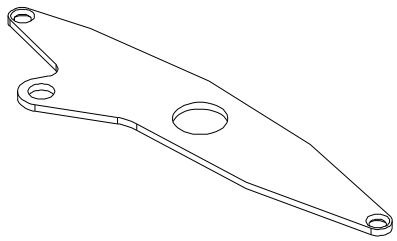 H=3 B=201 D=59	075.6073.XX EINDSTUK LAMEL 200.5MM PIECE FINALE LAME 200.5MM END PIECE LOUVRE 200.5MM ENDSTUECK LAMELLE 200.5MM	BS 100 038.1003.XX		2 st./pc 052.5311.-- DIN 7982 4.2 x 16
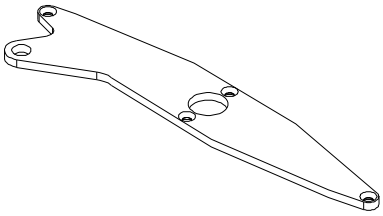 H=5 B=251 D=66.25	075.6074.XX EINDSTUK LAMEL 251MM PIECE FINALE LAME 251MM END PIECE LOUVRE 251MM ENDSTUECK LAMELLE 251MM	BS 100 038.1004.XX		4 st./pc 052.5311.-- DIN 7982 4.2 x 16
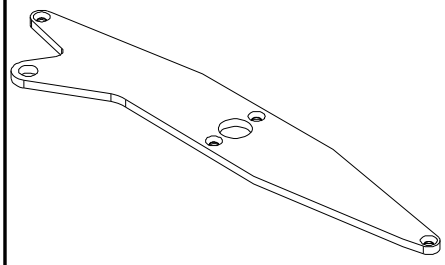 H=5 B=302 D=74.25	075.6075.XX EINDSTUK LAMEL 302MM PIECE FINALE LAME 302MM END PIECE LOUVRE 302MM ENDSTUECK LAMELLE 302MM	BS 100 038.1005.XX		4 st./pc 052.5311.-- DIN 7982 4.2 x 16
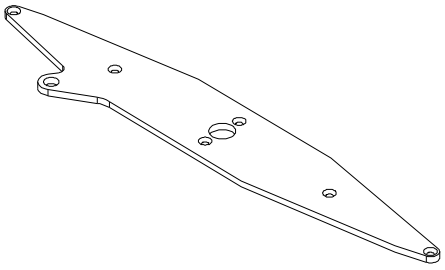 H=5 B=402 D=82	075.6076.XX EINDSTUK LAMEL 402MM PIECE FINALE LAME 402MM END PIECE LOUVRE 402MM ENDSTUECK LAMELLE 402MM	BS 100 038.1006.XX		6 st./pc 052.5311.-- DIN 7982 4.2 x 16

D0061263

G

EINDSTUK LAMEL
PIECE FINALE LAME
END PIECE LOUVRE
ENDSTUECK LAMELLE

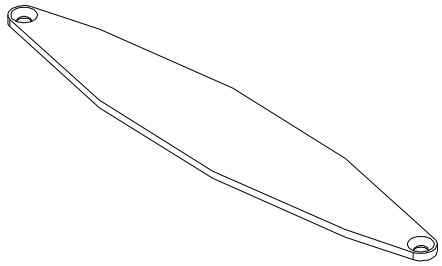 H=3 B=201 D=40	075.6033.XX EINDSTUK LAMEL 201MM PIECE FINALE LAME 201MM END PIECE LOUVRE 201MM ENDSTUECK LAMELLE 201MM	BS 100 038.1003.XX		2 st./pc 052.5311.-- DIN 7982 4.2 x 16
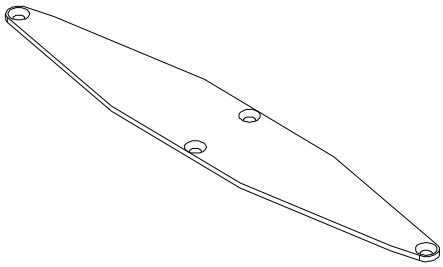 H=3 B=251 D=44.5	075.6034.XX EINDSTUK LAMEL 251MM PIECE FINALE LAME 251MM END PIECE LOUVRE 251MM ENDSTUECK LAMELLE 251MM	BS 100 038.1004.XX		4 st./pc 052.5311.-- DIN 7982 4.2 x 16
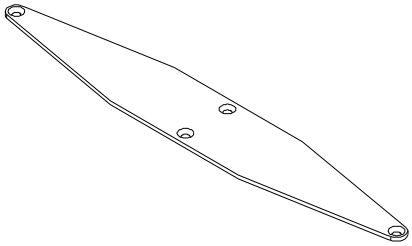 H=3 B=302 D=50.5	075.6035.XX EINDSTUK LAMEL 302MM PIECE FINALE LAME 302MM END PIECE LOUVRE 302MM ENDSTUECK LAMELLE 302MM	BS 100 038.1005.XX		4 st./pc 052.5311.-- DIN 7982 4.2 x 16

D0061264

EINDSTUK DRAAGARM
PIECE FINALE BRAS-SUPPORT
END PIECE SUPPORT ARM
ENDSTUECK TRAGARM

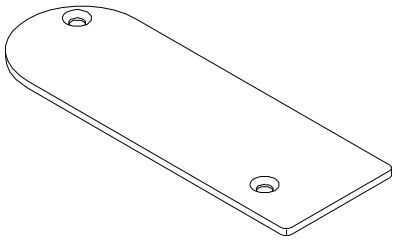 H=2.5 B=130 D=45	075.6100.XX EINDSTUK DRAAGARM PIECE FINALE BRAS-SUPPORT END PIECE SUPPORT ARM ENDSTUECK TRAGARM	BS 100 038.0100.XX		2 st./pc 052.5311.-- DIN 7982 4.2 x 16
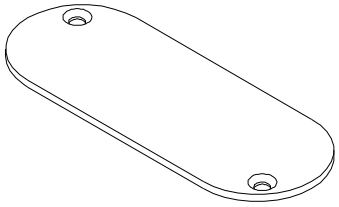 H=2.5 B=118 D=45	075.6101.XX EINDSTUK DRAAGARM PIECE FINALE BRAS-SUPPORT END PIECE SUPPORT ARM ENDSTUECK TRAGARM	BS 100 038.0101.XX		2 st./pc 052.5311.-- DIN 7982 4.2 x 16
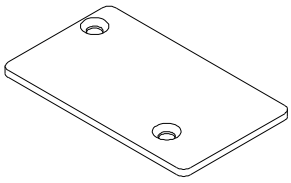 H=2.5 B=76 D=45	075.6106.XX EINDSTUK DRAAGARM PIECE FINALE BRAS-SUPPORT END PIECE SUPPORT ARM ENDSTUECK TRAGARM	BS 100 038.0106.XX		2 st./pc 052.5311.-- DIN 7982 4.2 x 16

D0061350

BEVESTIGINGSSET
SET DE FIXATION
FIXATION SET
BEFESTIGUNGSSATZ

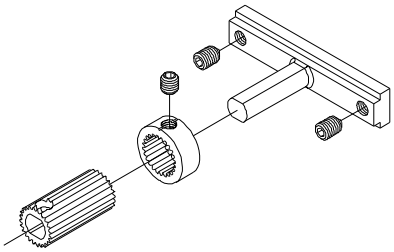	075.6088.-- BEVESTIGINGSSET VASTE LAMELLEN SET DE FIXATION LAMES FIXES SUPPORT SET FIXED LOUVRE BEFESTIGUNGSSATZ FESTE LAMELLEN	BS 100		2 st./pc 051.5269.-- DIN 914 M8 x 12 1 st./pc 051.5291.-- DIN 913 M8 x 8
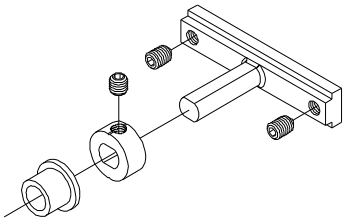	075.6258.-- BEVESTIGINGSSET BEWEEGBARE LAMELLEN SET DE FIXATION LAMES MOBILES SUPPORT SET MOVABLE LOUVRE BEFESTIGUNGSSATZ BEWEGLICHE LAMELLEN	BS 100		2 st./pc 051.5269.-- DIN 914 M8 x 12 1 st./pc 051.5291.-- DIN 913 M8 x 8
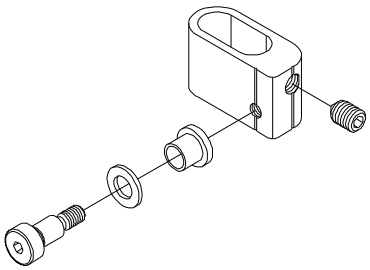	075.6504.XX KLEMSET AANDRIJFSTANG SET DE SERRAGE BARRE D'ENTRAINEMENT CLAMP SET DRIVE BAR KLEMMSATZ KURBELSTANGE	BS 100 038.0160.XX		1 st./pc 051.5269.-- DIN 914 M8 x 12 1 st./pc 050.5196.-- ISO 7379 (M6) 8 x 12

D0061352

BEVESTIGINGSSET
SET DE FIXATION
BRACKET SET
BEFESTIGUNGSSATZ

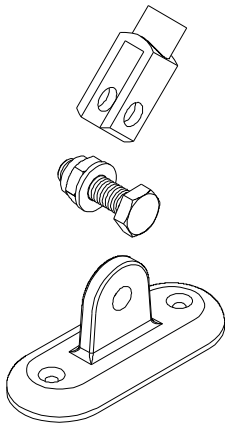	075.6160.XX BEVESTIGINGSSET DRAADSTANG SET DE FIXATION BARRE FILETEE FIXING PLATE SET THREADED ROD BEFESTIGUNGSSATZ GEWINDESTANGE	BS 100 038.0100.XX 038.0106.XX CR 120		
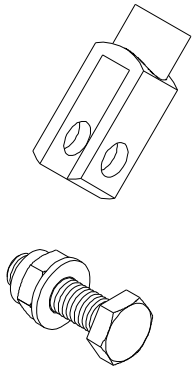	075.6161.-- GAFFEL FOURCHE FORNED HEAD GABELGELENKE	BS 100 BS 30		
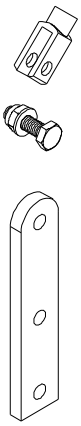	075.6163.XX BEVESTIGINGSSET DRAADSTANG SET DE FIXATION BARRE FILETEE FIXING PLATE SET THREADED ROD BEFESTIGUNGSSATZ GEWINDESTANGE	BS 100 038.0100.XX		
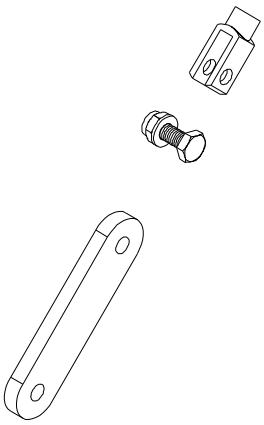	075.6167.XX BEVESTIGINGSSET DRAADSTANG SET DE FIXATION BARRE FILETEE FIXING PLATE SET THREADED ROD BEFESTIGUNGSSATZ GEWINDESTANGE	BS 100 038.0100.XX 038.0210.XX BS 30		

D0062155

G

ANKER
ANCRAGE
ANCHOR
ANKER

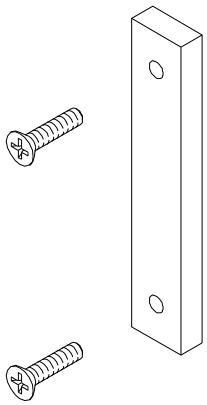

075.6506.--

BEVESTIGINGSSTUK

PIECE DE FIXATION

FIXING PIECE

BEFESTIGUNGSSTUECK

BS 100
038.0100.XX
038.0106.XX

D0061353

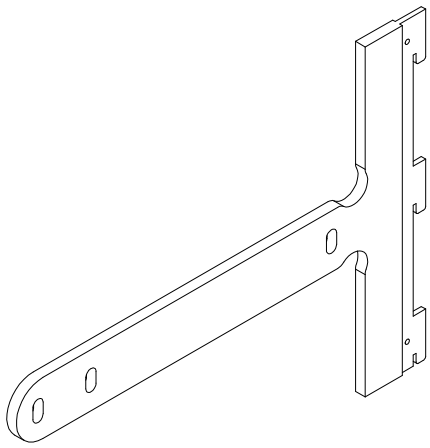 H=315 B=10 D=428	075.6200.XX GEVELBEVESTIGING FIXATION FA€ADE FIXATION CURTAIN WALL FASSADEBEFESTIGUNG	BS 100 038.0106.XX 038.0210.XX BS 30 GENERAL CW 50		2 st./pc 050.5000.-- DIN 965 M5 x 10
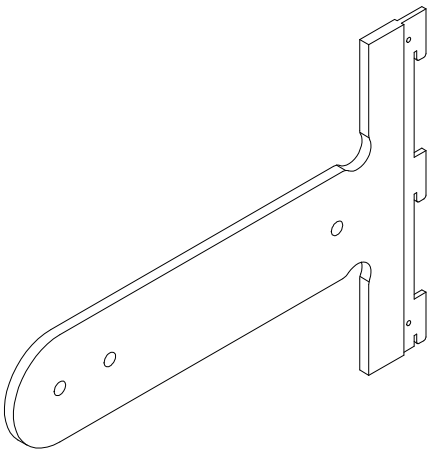 H=315 B=10 D=456.5	075.6201.XX GEVELBEVESTIGING FIXATION FA€ADE FIXATION CURTAIN WALL FASSADEBEFESTIGUNG	BS 100 038.0100.XX 038.0101.XX 038.0210.XX BS 30 BS 100 Solar CW 50		2 st./pc 050.5000.-- DIN 965 M5 x 10
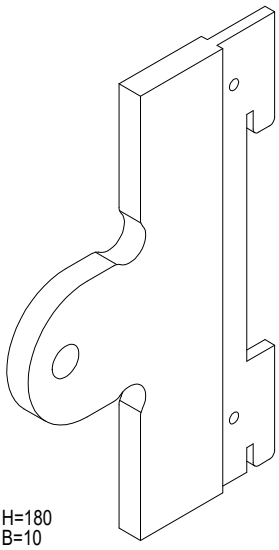 H=180 B=10 D=118	075.6211.XX BEVESTIGINGSSTUK PIECE DE FIXATION FIXING PIECE BEFESTIGUNGSSTUECK	BS 100 BS 30 BS 30 Solar CW 50		2 st./pc 050.5000.-- DIN 965 M5 x 10

D0061354

G

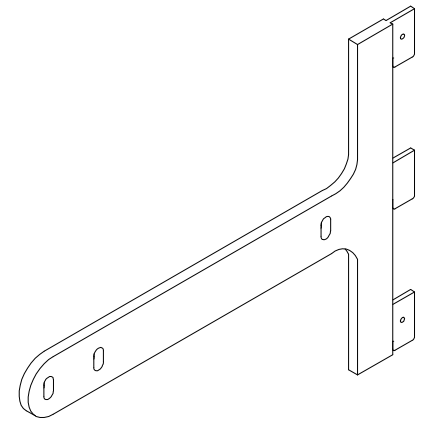 H=315 B=10 D=474	075.6202.XX GEVELBEVESTIGING FIXATION FA€ADE FIXATION CURTAIN WALL FASSADEBEFESTIGUNG	BS 100 BS 30		2 st./pc 050.5119.-- DIN 7985 M5 x 12
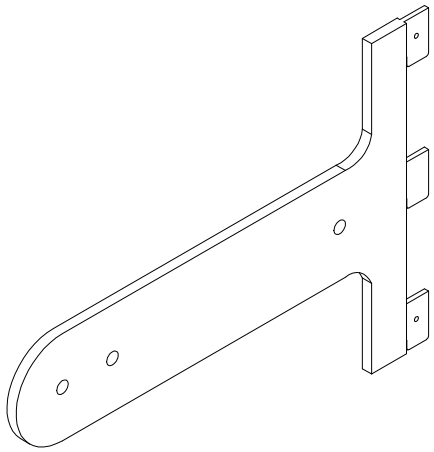 H=315 B=10 D=502.5	075.6203.XX GEVELBEVESTIGING FIXATION FA€ADE FIXATION CURTAIN WALL FASSADEBEFESTIGUNG	BS 100 BS 100 Solar		2 st./pc 050.5119.-- DIN 7985 M5 x 12
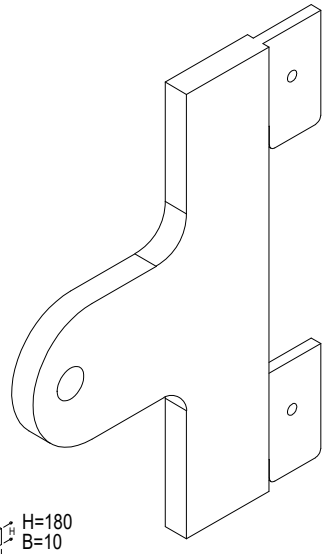 H=180 B=10 D=164	075.6213.XX BEVESTIGINGSSTUK PIECE DE FIXATION FIXING PIECE BEFESTIGUNGSSTUECK	BS 100 BS 30		2 st./pc 050.5119.-- DIN 7985 M5 x 12

D0061355

MUURBEVESTIGING
FIXATION MURALE
WALL BRACKETS
MAUERBEFESTIGUNG

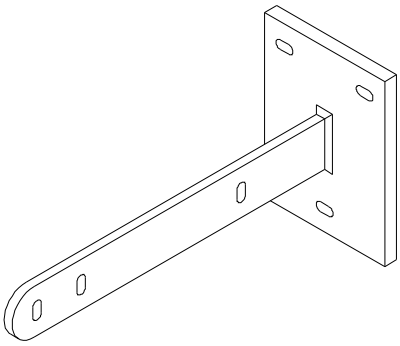 H=200 B=150 D=410	075.6215.XX MUURBEVESTIGING FIXATION MURALE WALL FIXATION MAUERBEFESTIGUNG	BS 100 038.0103.XX 038.0106.XX 038.0210.XX BS 30		
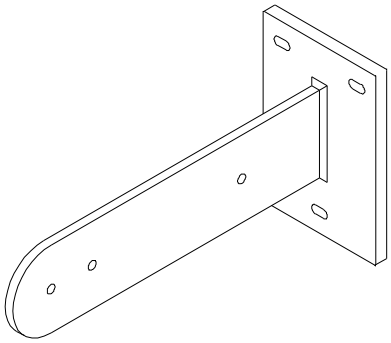 H=220 B=150 D=430	075.6216.XX MUURBEVESTIGING FIXATION MURALE WALL BRACKETS MAUERBEFESTIGUNG	BS 100 038.0100.XX 038.0101.XX		
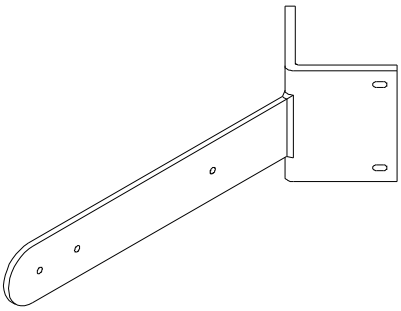 H=200 B=10 D=580	075.6217.XX MUURBEVESTIGING FIXATION MURALE WALL BRACKETS MAUERBEFESTIGUNG	BS 100 038.0103.XX 038.0106.XX 038.0210.XX BS 30		
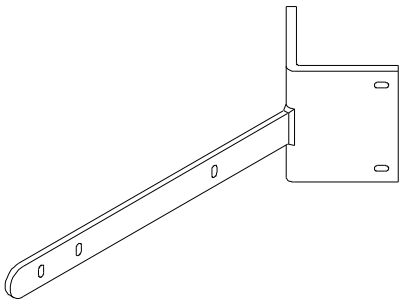 H=200 B=10 D=580	075.6218.XX MUURBEVESTIGING FIXATION MURALE WALL FIXATION MAUERBEFESTIGUNG	BS 100 038.0100.XX 038.0101.XX		

D0061356

G

MUURBEVESTIGING
FIXATION MURALE
WALL BRACKETS
MAUERBEFESTIGUNG

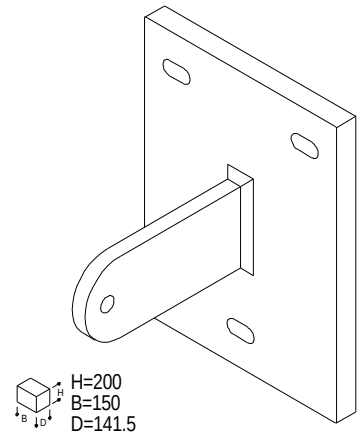 H=200 B=150 D=141.5	075.6170.XX MUURBEVESTIGING FIXATION MURALE WALL FIXATION MAUERBEFESTIGUNG	BS 100 BS 30		
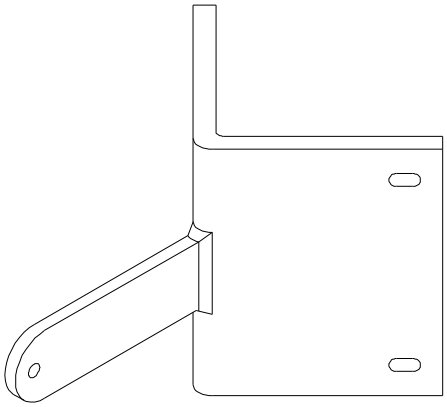	075.6171.XX MUURBEVESTIGING FIXATION MURALE WALL FIXATION MAUERBEFESTIGUNG	BS 100 BS 30		

D0062156

BEVESTIGING GLASS LOUVRES
FIXATION GLASS LOUVRES
FIXINGS GLASS LOUVRES
BEFESTIGUNG GLASS LOUVRES

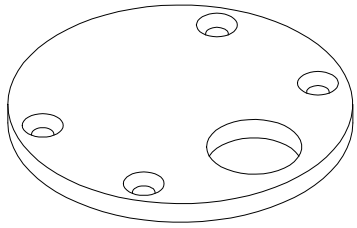 Ø=76 D=5	075.6027.XX EINDSTUK Ø76MM PIECE FINALE Ø76MM END PIECE Ø76MM ENDSTUECK Ø76MM	BS 100 BS 100 Solar		4 st./pc 052.5311.-- DIN 7982 4.2 x 16
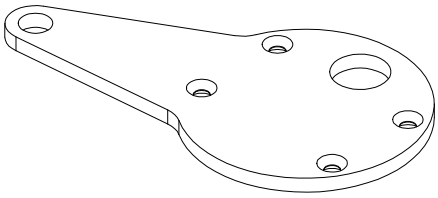 H=136 B=76 D=5	075.6077.XX EINDSTUK Ø76MM PIECE FINALE Ø76MM END PIECE Ø76MM ENDSTUECK Ø76MM	BS 100 BS 100 Solar		4 st./pc 052.5311.-- DIN 7982 4.2 x 16
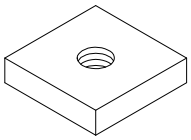 4 17 17	075.6297.-- BEVESTIGING FIXATION FIXINGS BEFESTIGUNG	BS 100 BS 100 Solar		1 st./pc 050.5039.-- DIN 912 M6 x 18
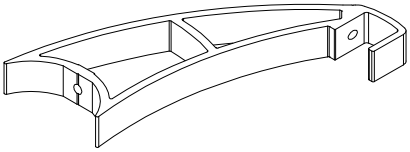 H=20 B=133.4 D=177	075.6302.XX GLASHOUDER 366MM SUPPORT DE VITRAGE 366MM PANEL GRIP 366MM GLASHALTEPROFIL 366MM	BS 100 Solar		1 st./pc 051.5271.-- DIN 914 M6 x 10

D0067198

VORMSTUK GLASS LOUVRES
PIECE MOULEE GLASS LOUVRES
MOULDING PIECE GLASS LOUVRES
FORMSTUECK GLASS LOUVRES

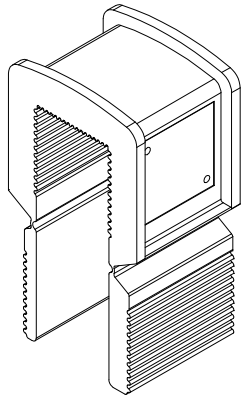

H
B D
30
24.2

080.9732.04

VORMSTUK GLAS
10 - 17 mm

PIECE MOULEE VERRE
10 - 17 mm

MOULDING PIECE GLASS
10 - 17 mm

FORMSTUECK GLAS
10 - 17 mm

BS 100 Solar

D0067203

AFSTANDSSTUK
PIECE D'ECARTEMENT
DISTANCE PIECE
DISTANZSTUECK

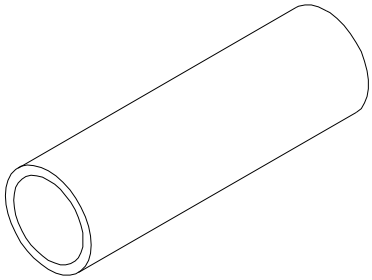

Ø=16
D=52

075.7000.XX

AFSTANDSSTUK

PIECE D'ECARTEMENT

DISTANCE PIECE

DISTANZSTUECK

BS 100

D0062158

KLEMSTUK
CLIP
CLIP
BEFESTIGUNGSKLOTZ

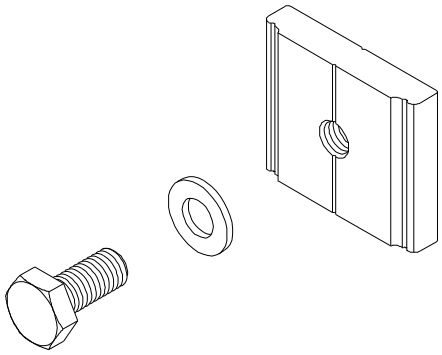

075.7001.XX
KLEMSTUK

CLIP

CLIP

BEFESTIGUNGSKLOTZ

BS 100
038.0200.XX
038.0230.XX

1 st./pc
050.5204.--
DIN 933
M10 x 22

1 st./pc
067.5205.--
DIN 125A
Ø10

D0062160

ZIJARM
BRAS LATERAL
SIDE ARM
SEITENARM

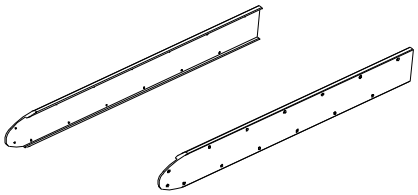 H=115 B=14 D=1005	075.6140.XX ZIJARM 115x1005MM BRAS LATERAL 115x1005MM SIDE ARM 115x1005MM SEITENARM 115x1005MM	BS 100 038.1001.XX		
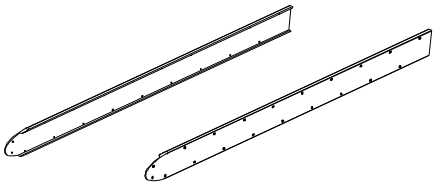 H=115 B=14 D=1455	075.6141.XX ZIJARM 115x1455MM BRAS LATERAL 115x1455MM SIDE ARM 115x1455MM SEITENARM 115x1455MM	BS 100 038.1001.XX		
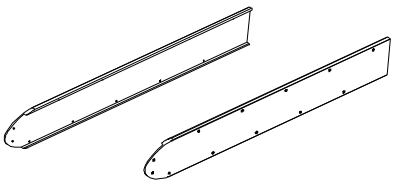 H=147 B=15 D=1090	075.6142.XX ZIJARM 147x1090MM BRAS LATERAL 147x1090MM SIDE ARM 147x1090MM SEITENARM 147x1090MM	BS 100 038.1002.XX		
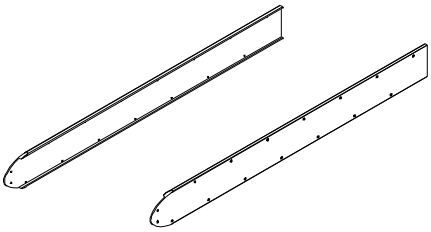 H=147 B=15 D=1480	075.6143.XX ZIJARM 147x1480MM BRAS LATERAL 147x1480MM SIDE ARM 147x1480MM SEITENARM 147x1480MM	BS 100 038.1002.XX		

D0061266

G

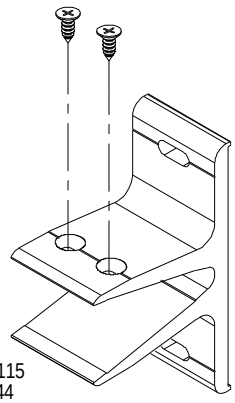 H=115 B=44 D=73.5	075.6230.XX LAMEL HOUDER 0° SUPPORT-LAME 0° LOUVRE GRIP 0° LAMELLENHALTER 0°	BS 100 038.1003.XX 038.1004.XX 038.1005.XX		2 st./pc 052.5332.-- DIN 7982 4.8 x 13
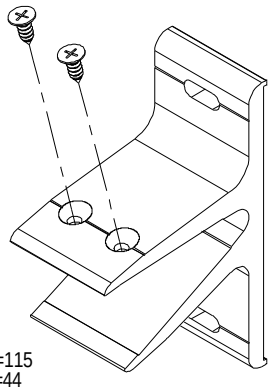 H=115 B=44 D=76.2	075.6231.XX LAMEL HOUDER 15° SUPPORT-LAME 15° LOUVRE GRIP 15° LAMELLENHALTER 15°	BS 100 038.1003.XX 038.1004.XX 038.1005.XX		2 st./pc 052.5332.-- DIN 7982 4.8 x 13
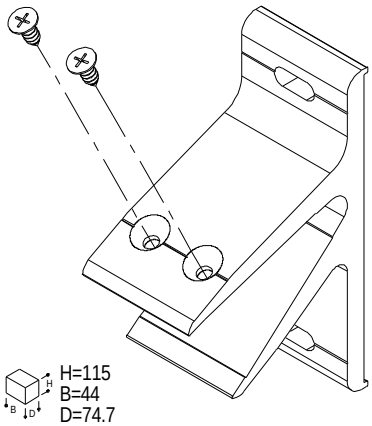 H=115 B=44 D=74.7	075.6232.XX LAMEL HOUDER 30° SUPPORT-LAME 30° LOUVRE GRIP 30° LAMELLENHALTER 30°	BS 100 038.1003.XX 038.1004.XX 038.1005.XX		2 st./pc 052.5332.-- DIN 7982 4.8 x 13
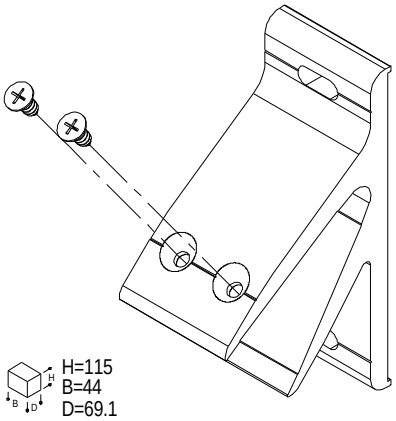 H=115 B=44 D=69.1	075.6233.XX LAMEL HOUDER 45° SUPPORT-LAME 45° LOUVRE GRIP 45° LAMELLENHALTER 45°	BS 100 038.1003.XX 038.1004.XX 038.1005.XX		2 st./pc 052.5332.-- DIN 7982 4.8 x 13

D0061271

LAMEL HOUDER DILATATIE
SUPPORT-LAME DILATATION
LOUVRE GRIP DILATATION
LAMELLEN HALTER AUSDEHNUNG

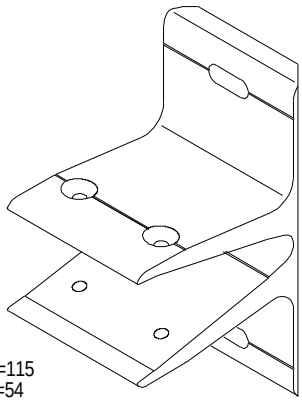 H=115 B=54 D=73.5	075.6330.XX LAMEL HOUDER 0° SUPPORT-LAME 0° LOUVRE GRIP 0° LAMELLENHALTER 0°	BS 100 038.1003.XX 038.1004.XX 038.1005.XX		2 st./pc 050.5080.-- DIN 965 M5 x 40
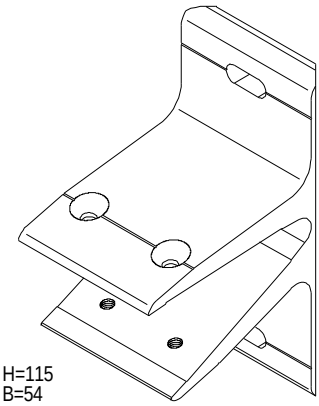 H=115 B=54 D=76.2	075.6331.XX LAMEL HOUDER 15° SUPPORT-LAME 15° LOUVRE GRIP 15° LAMELLENHALTER 15°	BS 100 038.1003.XX 038.1004.XX 038.1005.XX		2 st./pc 050.5080.-- DIN 965 M5 x 40
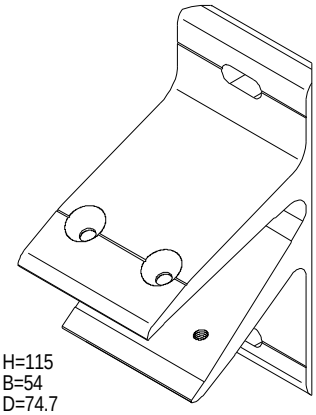 H=115 B=54 D=74.7	075.6332.XX LAMEL HOUDER 30° SUPPORT-LAME 30° LOUVRE GRIP 30° LAMELLENHALTER 30°	BS 100 038.1003.XX 038.1004.XX 038.1005.XX		2 st./pc 050.5080.-- DIN 965 M5 x 40
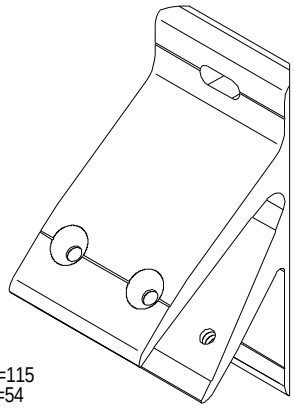 H=115 B=54 D=69.1	075.6333.XX LAMEL HOUDER 45° SUPPORT-LAME 45° LOUVRE GRIP 45° LAMELLENHALTER 45°	BS 100 038.1003.XX 038.1004.XX 038.1005.XX		2 st./pc 050.5080.-- DIN 965 M5 x 40

D0067196

LAMEL HOUDER
SUPPORT-LAME
LOUVRE GRIP
LAMELLENHALTER

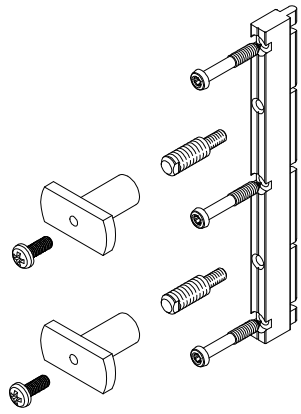

075.6245.--

BEVESTIGINGSSET LAMELHOUDER

SET DE FIXATION SUPPORT-LAME

LOUVRE GRIP BRACKET SET

BEFESTIGUNGSSATZ LAMELLENHALTER

BS 100
075.6230.XX
075.6231.XX
075.6232.XX
075.6233.XX

3 st./pc
053.5467.--
REYNAERS
6.3 x 40

2 st./pc
075.6227.--
REYNAERS
M10/M6 x 27.5

2 st./pc
050.5116.--
DIN 7985
M6 x 16

D0061272

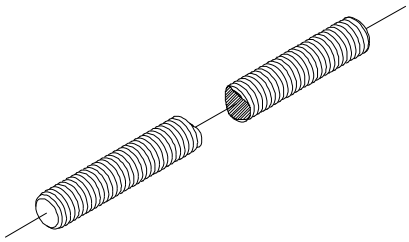	050.5215.-- DRAADSTANG M10x2M BARRE FILETEE M10x2M THREADED ROD M10x2M GEWINDESTANGE M10x2M	VISION 50 CR 120 BS 100 BS 30		
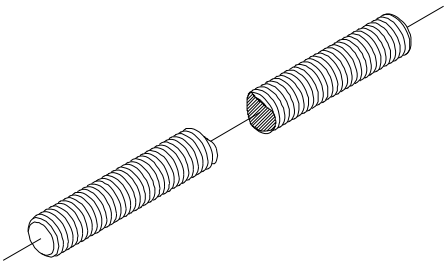	050.5216.-- DRAADSTANG M12x3M BARRE FILETEE M12x3M THREADED ROD M12x3M GEWINDESTANGE M12x3M	BS 100 0B0.1601.XX STANDARDS CR 120 BS 30		
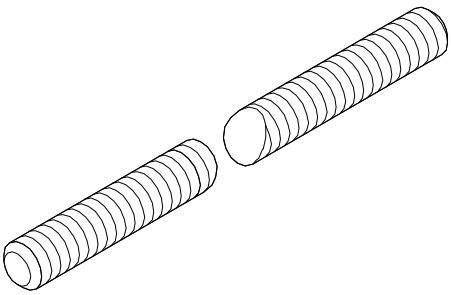	050.5220.-- DRAADSTANG M10x1M VIS M10x1M SCREW M10x1M SCHRAUBE M10x1M	VISION 50 BS 100 BS 20		

D0062161

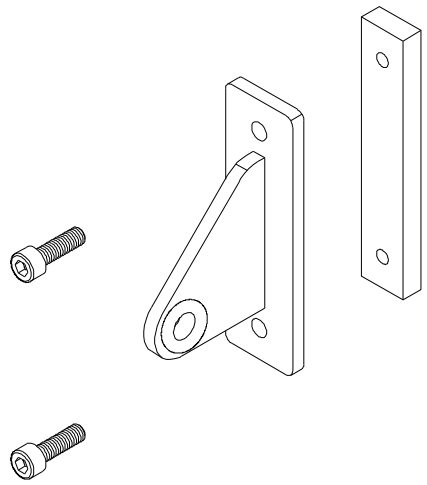	075.6501.-- BEVESTIGINGSSET SET DE FIXATION FIXATION SET BEFESTIGUNGSSATZ	BS 100 038.0100.XX 038.0106.XX		
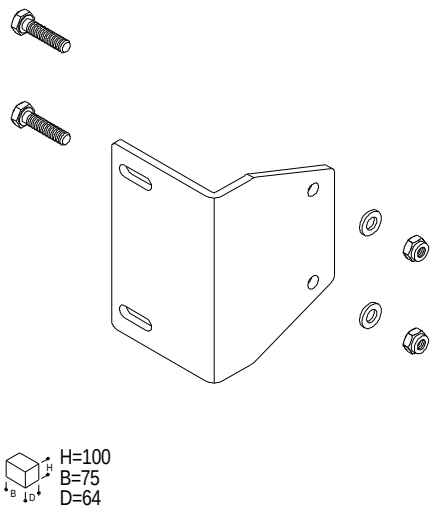 H=100 B=75 D=64	075.6502.-- BEVESTIGINGSSTUK PIECE DE FIXATION FIXING PIECE BEFESTIGUNGSSTUECK	BS 100 038.0160.XX		
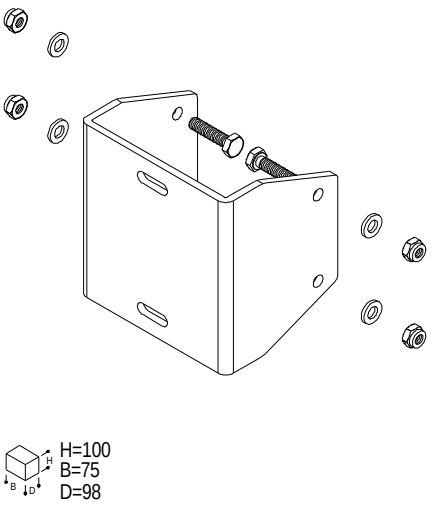 H=100 B=75 D=98	075.6503.-- BEVESTIGINGSSTUK PIECE DE FIXATION FIXING PIECE BEFESTIGUNGSSTUECK	BS 100 038.0160.XX		

D0062162

BS 100

SCHAKELAAR
COMMUTATEUR
SWITCH
SCHALTER

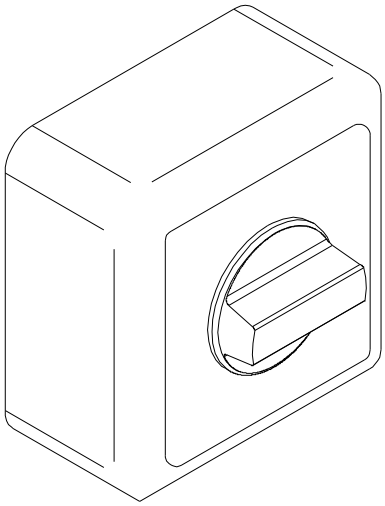

060.6913.01

SCHAKELAAR

COMMUTATEUR

SWITCH

SCHALTER

CS 59Pa
CS 59
CS 59-HV
CS 59-Re
CS 59-So
CS 68
CS 68-HV
CS 68-Re
CS 68-So
CW 50
PR 200
TR 200
CS 68-FP
CR 120
CS 77
CW 86
CS 77-HV
CS 59Pa-AP
CS 59-AP
CS 68-AP
CS 77-AP
BS 100

D0062163

G

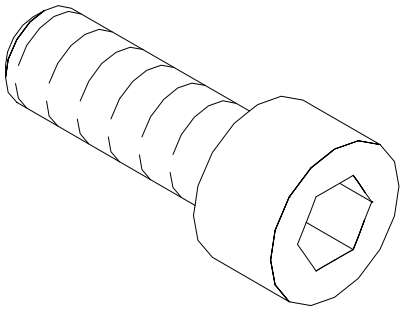	050.5080.-- SCHROEF MET BORGINGSVERF DIN 965 INOX M5x40 VIS AVEC COLLE DE BLOCAGE DIN 965 INOX M5x40 SCREW WITH LOCKPAINT DIN 965 INOX M5x40 SCHRAUBE MIT SICHER.FARBE DIN 965 INOX M5x40	BS 100 BS 40		
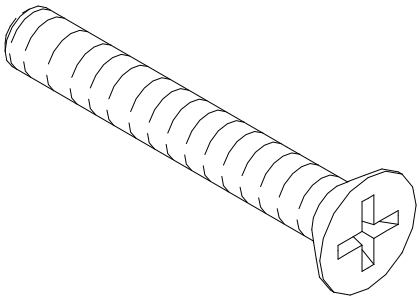	050.5039.-- SCHROEF MET BORGINGSVERF DIN 912 M6x18 VIS AVEC COLLE DE BLOCAGE DIN 912 M6x18 SCREW WITH LOCKPAINT DIN 912 M6x18 SCHRAUBE MIT SICHER.FARBE DIN 912 M6x18	BS 100 BS 100 Solar		
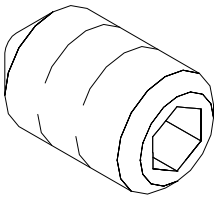	051.5283.-- SCHROEF MET BORGINGSVERF DIN 914 M6x16 VIS AVEC COLLE DE BLOCAGE DIN 914 M6x16 SCREW WITH LOCKPAINT DIN 914 M6x16 SCHRAUBE MIT SICHER.FARBE DIN 914 M6x16			
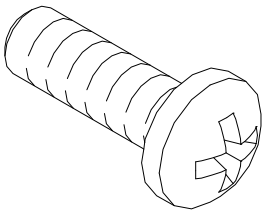	050.5119.-- SCHROEF MET BORGINGSVERF VIS AVEC COLLE DE BLOCAGE SCREW WITH LOCKPAINT SCHRAUBE MIT SICHER.FARBE	BS 100 BS 100 Solar BS 30 BS 30 Solar CS 59 CS 59PA CS 68 CS 77 ES 50		

D0067194

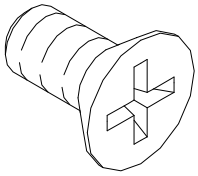	050.5000.-- SCHROEF MET BORGINGSVERF DIN 965 INOX M5x10 VIS AVEC COLLE DE BLOCAGE DIN 965 INOX M5x10 SCREW WITH LOCKPAINT DIN 965 INOX M5x10 SCHRAUBE MIT SICHER.FARBE DIN 965 INOX M5x10	BS 100 BS 30		
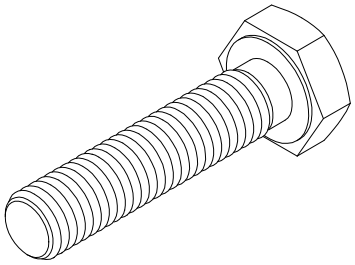	050.5200.-- SCHROEF DIN 933 INOX M10x40 VIS DIN 933 INOX M10x40 SCREW DIN 933 INOX M10x40 SCHRAUBE DIN 933 INOX M10x40	BS 100 BS 30		
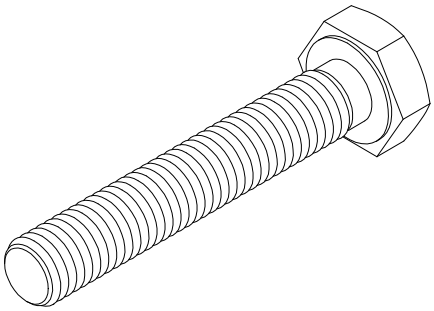	050.5203.-- SCHROEF DIN 933 INOX M10x60 VIS DIN 933 INOX M10x60 SCREW DIN 933 INOX M10x60 SCHRAUBE DIN 933 INOX M10x60	BS 100 BS 20 BS 30		
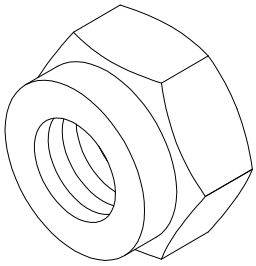	050.5393.-- ZESKANTMOER ZELFBORGEND M12x12 ECROU HEXAGONALE AUTOBLOQANTE M12x12 HEXAGON NUT SELF-LOCKING M12x12 SECHSKANTMUTTER SELBSTSICHEREND M12x12	BS 100		

D0062164

BEVESTIGINGSMIDDELEN
MOYENS DE FIXATION
FIXINGS
BEFESTIGUNGSMITTEL

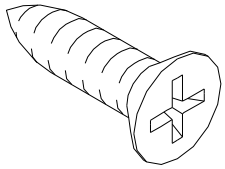	052.5311.-- ZT SCHROEF DIN 7982 INOX 4.2x16 VIS PARKER DIN 7982 INOX 4.2x16 ST-SCREW DIN 7982 INOX 4.2x16 BLECHSCHRAUBE DIN 7982 INOX 4.2x16	MOSQUITO CW 86 CS 77-BP BS 100 Eco system PR 100		
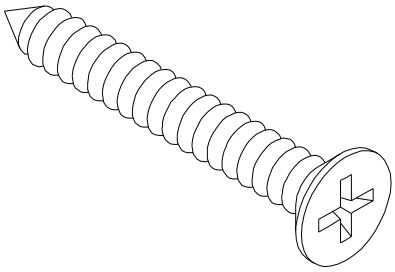	052.5313.-- ZT SCHROEF DIN 7982 INOX 4.2x32 VIS PARKER DIN 7982 INOX 4.2x32 ST-SCREW DIN 7982 INOX 4.2x32 BLECHSCHRAUBE DIN 7982 INOX 4.2x32	CS 24-SL CS 24-SL/AP CP 155 CP 96 BS 100 CP 96-AP Eco system CS 38-SL Eco system-AP		
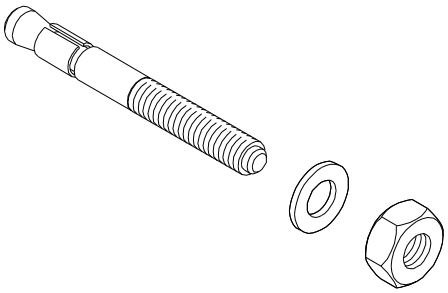	054.5480.-- KEILANKER M10x95 GOUJON EXPANSIBLE M10x95 WEDGE ANCHOR M10x95 KEILANKER M10x95	CW 50 CW 50-HI CW 50-HL CW 50-RA CW 60 CW 50-SC CW 50-SG CW 60-SG BS 100 BS 30 CW 60-SC CW 60-HI		
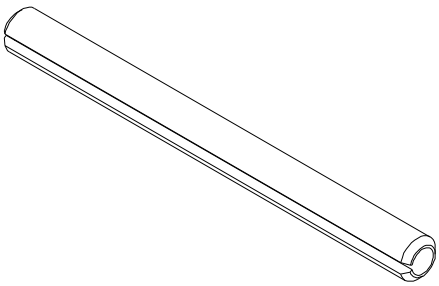	058.5943.-- SPANSTIFT DIN 1481 INOX Ø3x40 GOUJON DE TENSION DIN 1481 INOX Ø3x40 DOWEL DIN 1481 INOX Ø3x40 SPANSTIFT DIN 1481 INOX Ø3x40	CW 60-DRL		
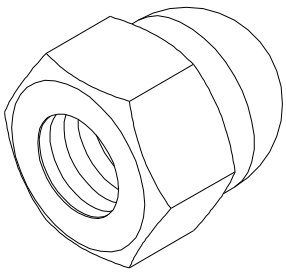	067.5202.-- BOLKOPMOER M12x22 ECROU DE GACHE M12x22 CUP NUT M12x22 HUTMUTTER M12x22	BS 100		

D0062166

G

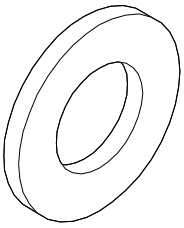	067.5205.-- RONDEL M10 RONDELLE M10 WASHER M10 SCHEIBE M10	CW 50 CW 50-HI CW 50-HL CW 50-RA CW 60 CS 77 CW 50-SC CW 50-SG CW 60-SG BS 100 BS 30 BS 20 CW 60-SC CW 60-HI		
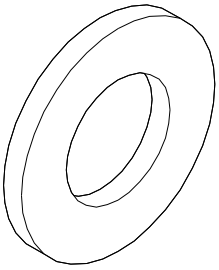	067.5206.-- RONDEL M12x2.5 RONDELLE M12x2.5 WASHER M12x2.5 SCHEIBE M12x2.5	BS 100		
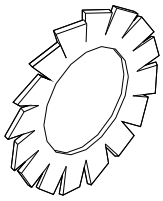	079.5206.-- VEERRING M10 RONDELLE GROWER M10 SHAKEPROOF WASHER M10 FEDERRING M10	VISION 50 CW 50 CW 50-HI CW 50-HL CW 50-RA CW 60 CS 77 CW 50-SC CW 50-SG CW 60-SG BS 100 BS 30 CW 60-SC CW 60-HI		
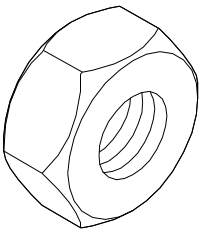	079.5398.-- ZESKANTMOER DIN 934 INOX M10 ECROU HEXAGONALE DIN 934 INOX M10 HEXAGON NUT DIN 934 INOX M10 SECHSKANTMUTTER DIN 934 INOX M10	VISION 50 CW 50 CW 50-HI CW 50-HL CW 50-RA CW 60 CS 77 CW 86 CW 50-SC CW 50-SG CW 60-SG BS 100 BS 30 CW 60-SC CW 60-HI		

D0062167

G

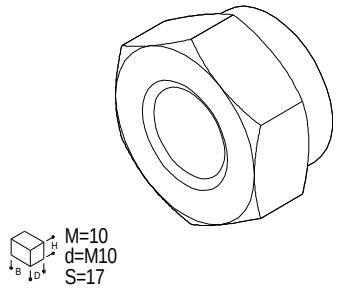 M=10 d=M10 S=17	050.5402.-- ZESKANTMOER ZELFBORGEND DIN 985 M10 ECROU HEXAGONALE AUTOBLOQANTE DIN 985 M10 HEXAGON NUT SELF-LOCKING DIN 985 M10 SECHSKANTMUTTER SELBSTSICHEREND DIN 985 M10	BS 100		
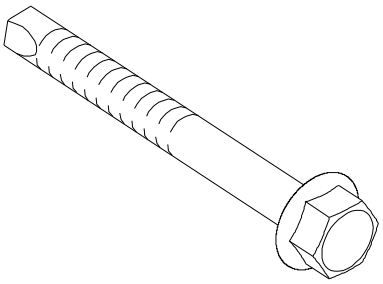	053.5199.-- SCHROEF ZELFBOREND Ø5.5x70 VIS AUTOPERCEUSE Ø5.5x70 SCREW SELF-DRILLING Ø5.5x70 BLECHSCHRAUBE Ø5.5x70	BS 100		
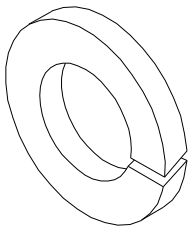	054.5464.-- RONDEL M8 RONDELLE M8 WASHER M8 SCHEIBE M8	BS 100		
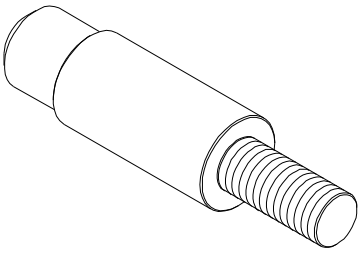	075.6260.-- AS AXE AXLE ACHSE	BS 100		
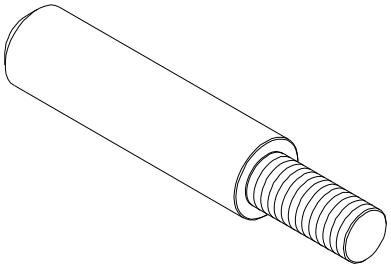	075.6261.-- AS AXE AXLE ACHSE	BS 100		

D0062130

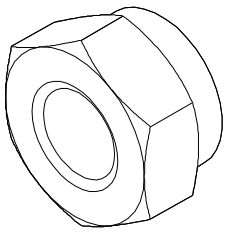 H=8 d=M8 S=13	050.5394.-- ZESKANTMOER ZELFBORGEND DIN 985 M8 ECROU HEXAGONALE AUTOBLOQANTE DIN 985 M8 HEXAGON NUT SELF-LOCKING DIN 985 M8 SECHSKANTMUTTER SELBSTSICHEREND DIN 985 M8	CW 50 034.0190.XX BS 100		
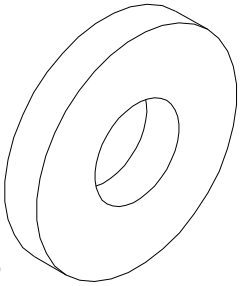 Ø=10.5 B=4	054.5465.-- RONDEL M10 RONDELLE M10 WASHER M10 SCHEIBE M10	BS 100		
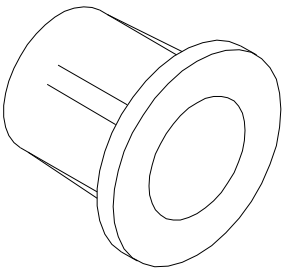	075.6270.07 BUS DOUILLE BUSH BUCHSE	BS 100		
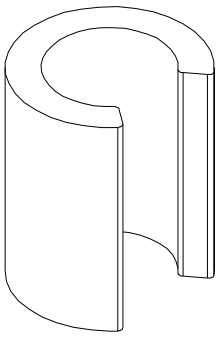 Ø=12.1 B=22	075.6271.07 AFSTANDSSTUK 22MM PIECE D'ECARTEMENT 22MM DISTANCE PIECE 22MM DISTANZSTUECK 22MM	BS 100		
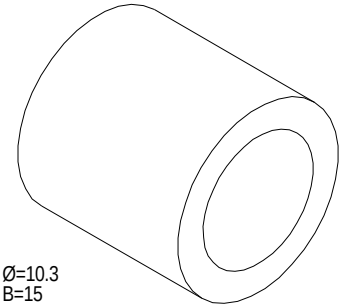 Ø=10.3 B=15	075.6272.01 AFSTANDSSTUK 15MM PIECE D'ECARTEMENT 15MM DISTANCE PIECE 15MM DISTANZSTUECK 15MM	BS 100		

D0062132

G

MOTOR
MOTEUR
MOTOR
ANTRIEB

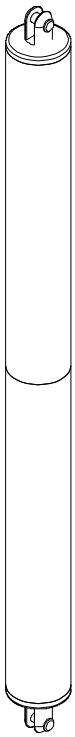

H=1000

075.6499.--

LINEAIRE MOTOR
PICOLO XL 100 230V ~50Hz

VERIN ELECTRIQUE
PICOLO XL 100 230V ~50Hz

LINEAR ACTUATOR
PICOLO XL 100 230V ~50Hz

LINEARANTRIEB
PICOLO XL 100 230V ~50Hz

BS 100

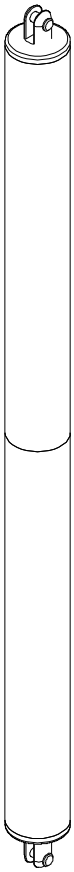

H=2000

075.6500.--

LINEAIRE MOTOR
PICOLO XL 200 230V ~50Hz

VERIN ELECTRIQUE
PICOLO XL 200 230V ~50Hz

LINEAR ACTUATOR
PICOLO XL 200 230V ~50Hz

LINEARANTRIEB
PICOLO XL 200 230V ~50Hz

BS 100

D0062168

REYNAERS
aluminium

www.reynaers.com